Report No. EN 33112 M0A0
MET Project No. 33112

**Test Report issued under the responsibility of:**

MET Laboratories, Inc.
© Copyright 2011

# TEST REPORT

## EN 60950-1
## Information technology equipment – Safety – Part 1: General requirements

| | |
|---|---|
| **Report Number**. .....: | 33112 |
| Date of issue .....: | November 29, 2011 |
| Total number of pages ..... | 64 pages |
| **CB Testing Laboratory**.....: | MET Laboratories, Inc. |
| Address .....: | 914 West Patapsco Ave, Baltimore, MD 21230, USA |
| **Applicant's name**.....: | Ubiquiti Networks |
| Address .....: | 91 E. Tasman San Jose, CA 95134, U.S.A |
| **Manufacturer's name**……..: | Ubiquiti Networks |
| Address .....: | 91 E. Tasman San Jose, CA 95134, U.S.A |
| **Test specification:** | CE |
| Standard .....: | EN 60950-1: 2006 + A1:2010 |
| Test procedure .....: | CB Scheme |
| Non-standard test method……..: | N/A |
| **Test Report Form No**.....: | IEC60950_1B |
| Test Report Form(s) Originator .....: | SGS Fimko Ltd |
| Master TRF .....: | Dated 2010-04 |

**Copyright © 2010 Worldwide System for Conformity Testing and Certification of Electrotechnical Equipment and Components (IECEE), Geneva, Switzerland. All rights reserved.**

This publication may be reproduced in whole or in part for non-commercial purposes as long as the IECEE is acknowledged as copyright owner and source of the material. IECEE takes no responsibility for and will not assume liability for damages resulting from the reader's interpretation of the reproduced material due to its placement and context.

If this Test Report Form is used by non-IECEE members, the IECEE/IEC logo and the reference to the CB Scheme procedure shall be removed.

**This report is not valid as a CB Test Report unless signed by an approved CB Testing Laboratory and appended to a CB Test Certificate issued by an NCB in accordance with IECEE 02.**

| | |
|---|---|
| **Test item description .....:** | Security Camera |
| Trade Mark .....: | UBIQUITI NETWORKS |
| Manufacturer .....: | Ubiquiti Networks, Inc. |
| Model/Type reference .....: | AirCam Dome |
| Ratings .....: | 24VDC, 0.5A POE by external LPS power supply |

| **Testing procedure and testing location:** | | | |
|---|---|---|---|
| ☐ | **CB Testing Laboratory**: | MET Laboratories, Inc. | |
| Testing location/ address .....: | | 914 West Patapsco Ave,<br>Baltimore MD 21230, USA | |
| | Tested by (name + signature).....: | | |
| | Approved by (name + signature).....: | | |
| ☒ | **Associated CB Laboratory:** | MET Laboratories, Inc. | |
| Testing location/ address .....: | | 33439 Western Ave.<br>Union City, CA 94587 | |
| | Tested by (name + signature).....: | Shaima Adin | |
| | Approved by (name + signature).....: | Nader Tabesh | |

**List of Attachments (including a total number of pages in each attachment):**

**Enclosure 1**: Other Country National And Group Differences, pg 41

**Enclosure 2:** Photographs (Figures), pg 62

**Summary of testing:**

| **Tests performed (name of test and test clause):** | | **Testing location:** |
|---|---|---|
| 1.7.13 | Marking Durability Test | **33439 Western Ave.** |
| 1.6.2 | Input Current Test | **Union City, CA 94587** |
| 4.5.1 | Temperature Test | |
| 4.2.10 | Ceiling Mounted Equipment Test | |

**Summary of compliance with National Differences**

List of countries addressed: AT, BE, CH, CN, CZ, DE, DK, FI, GB, KR, JP, NL, NO, SE, SG, SL, & US.

Group Differences are applicable for CENELEC member countries: Austria, Belgium, Bulgaria, Cyprus, the Czech Republic, Denmark, Estonia, Finland, France, Germany, Greece, Hungary, Iceland, Ireland, Italy, Latvia, Lithuania, Luxembourg, Malta, the Netherlands, Norway, Poland, Portugal, Romania, Slovakia, Slovenia, Spain, Sweden, Switzerland and the United Kingdom and CENELEC affiliate member countries: Turkey.

- Product is powered by external Listed AC/DC power supply through POE connection.
- Product is intended to be operated indoor. The product is not evaluated for outdoor
- Product is intended to operate in Pollution Degree II environment.
- Product is Operator accessible

**Copy of marking plate**

The artwork below may be only a draft. The use of certification marks on a product must be authorized by the respective NCBs that own these marks.

(Additional requirements for markings. See 1.7 NOTE)

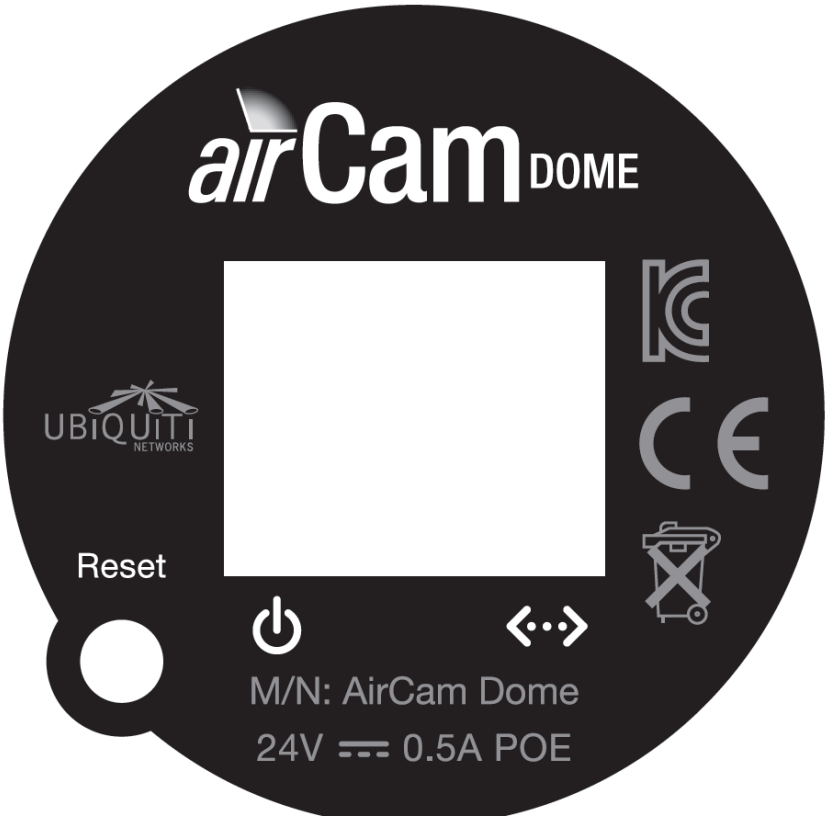

| | |
|---|---|
| **Test item particulars**.....: | |
| Equipment mobility.....: | Ceiling Mounted Equipment. |
| Connection to the mains.....: | Power to the equipment is provided through POE Connection through External LPS Listed AC/DC power supply Connected to mains |
| Operating condition.....: | Continuous |
| Access location .....: | Operator Accessible |
| Over voltage category (OVC) .....: | DC: Other |
| Mains supply tolerance (%) or absolute mains supply values .....: | +20%, -15% |
| Tested for IT power systems .....: | No |
| IT testing, phase-phase voltage (V) .....: | N/A |
| Class of equipment .....: | Class III |
| Considered current rating of protective device as part of the building installlation (A) .....: | Part of the external Listed AC/DC power supply adaptor. |
| Pollution degree (PD) .....: | PD II |
| IP protection class .....: | IPX0 |
| Altitude during operation (m) .....: | 14m |
| Altitude of test laboratory (m) .....: | 14m |
| Mass of equipment (kg) .....: | 0.5Kg |
| **Possible test case verdicts:** | |
| - test case does not apply to the test object..... : | N/A (or N) |
| - test object does meet the requirement..... : | P (Pass) |
| - test object does not meet the requirement ..... : | F (Fail) |
| **Testing**..... : | |
| Date of receipt of test item..... : | November 02, 2011 |
| Date of performance of tests ..... : | November 08, 2011 |

**General remarks:**

The test results presented in this report relate only to the object tested.
This report shall not be reproduced, except in full, without the written approval of the Issuing testing laboratory.
"(see Enclosure #)" refers to additional information appended to the report.
"(see appended table)" refers to a table appended to the report.

Throughout this report a ☐ comma / ☒ point is used as the decimal separator.

| **Manufacturer's Declaration per sub-clause 6.2.5 of IECEE 02:** | |
|---|---|
| The application for obtaining a CB Test Certificate includes more than one factory location and a declaration from the Manufacturer stating that the sample(s) submitted for evaluation is (are) representative of the products from each factory has been provided .....: | ☐ Yes<br>☒ Not applicable |
| When differences exist; they shall be identified in the General product information section. | |
| **Name and address of factory (ies)..... :** Same as manufacturer | |
| **General product information:**<br><br>Small, slightly tinted, designed to easily and discretely install into ceilings.<br>• Built-in Microphone<br>• 30 FPS<br>• 1MP/HDTV 720p<br>• 4.0mm / F1.5<br>• Powered through Ethernet<br><br>The AirCam line of H.264 megapixel cameras combine advanced industrial design, powerful performance with market leading cost-effectiveness. | |

| EN 60950-1 | | | |
|---|---|---|---|
| Clause | Requirement + Test | Result - Remark | Verdict |

| | | | |
|---|---|---|---|
| **1** | **GENERAL** | | P |

| | | | |
|---|---|---|---|
| **1.5** | **Components** | | P |
| 1.5.1 | General | | P |
| | Comply with IEC 60950-1 or relevant component standard | (see appended tables 1.5.1) | P |
| 1.5.2 | Evaluation and testing of components | | P |
| 1.5.3 | Thermal controls | No thermal controls | N/A |
| 1.5.4 | Transformers | | N/A |
| 1.5.5 | Interconnecting cables | | N/A |
| 1.5.6 | Capacitors bridging insulation | Part of the external AC/DC power supply adaptor. | N/A |
| 1.5.7 | Resistors bridging insulation | Part of the external AC/DC power supply adaptor. | N/A |
| 1.5.7.1 | Resistors bridging functional, basic or supplementary insulation | Part of the external AC/DC power supply adaptor. | N/A |
| 1.5.7.2 | Resistors bridging double or reinforced insulation between a.c. mains and other circuits | Part of the external AC/DC power supply adaptor. | N/A |
| 1.5.7.3 | Resistors bridging double or reinforced insulation between a.c. mains and antenna or coaxial cable | Part of the external AC/DC power supply adaptor. | N/A |
| 1.5.8 | Components in equipment for IT power systems | | N/A |
| 1.5.9 | Surge suppressors | Part of the external Listed AC/DC power supply | N/A |
| 1.5.9.1 | General | | N/A |
| 1.5.9.2 | Protection of VDRs | | N/A |
| 1.5.9.3 | Bridging of functional insulation by a VDR | | N/A |
| 1.5.9.4 | Bridging of basic insulation by a VDR | | N/A |
| 1.5.9.5 | Bridging of supplementary, double or reinforced insulation by a VDR | | N/A |

| | | | |
|---|---|---|---|
| **1.6** | **Power interface** | | P |
| 1.6.1 | AC power distribution systems | | N/A |
| 1.6.2 | Input current | (see appended table 1.6.2)<br>Test performed | P |
| 1.6.3 | Voltage limit of hand-held equipment | Not hand-held equipment | N/A |
| 1.6.4 | Neutral conductor | | N/A |

| EN 60950-1 | | | |
|---|---|---|---|
| Clause | Requirement + Test | Result - Remark | Verdict |
| **1.7** | **Marking and instructions** | | P |
| 1.7.1 | Power rating and identification markings | | P |
| 1.7.1.1 | Power rating marking | | P |
| | Multiple mains supply connections.....: | | N/A |
| | Rated voltage(s) or voltage range(s) (V) .....: | 24VDC. POE through external AC/DC power supply adaptor. | P |
| | Symbol for nature of supply, for d.c. only ..: | Provided on the label | P |
| | Rated frequency or rated frequency range (Hz) ...: | DC equipment | N/A |
| | Rated current (mA or A) .....: | 0.5A.<br>POE through external AC/DC power supply adaptor. | P |
| 1.7.1.2 | Identification markings | Provided on the equipment | P |
| | Manufacturer's name or trade-mark or identification mark .....: | Provided on the equipment | P |
| | Model identification or type reference .....: | Provided on the equipment | P |
| | Symbol for Class II equipment only .....: | Not class II equipment | N/A |
| | Other markings and symbols .....: | | N/A |
| 1.7.2 | Safety instructions and marking | Provided in the user manual | P |
| 1.7.2.1 | General | | P |
| 1.7.2.2 | Disconnect devices | Addressed in the manual | N/A |
| 1.7.2.3 | Overcurrent protective device | Part of the external Listed AC/DC power supply adaptor | N/A |
| 1.7.2.4 | IT power distribution systems | | N/A |
| 1.7.2.5 | Operator access with a tool | | N/A |
| 1.2.7.6 | Ozone | No Ozone | N/A |
| 1.7.3 | Short duty cycles | | N/A |
| 1.7.4 | Supply voltage adjustment .....: | | N/A |
| | Methods and means of adjustment; reference to installation instructions .....: | | N/A |
| 1.7.5 | Power outlets on the equipment .....: | None | N/A |
| 1.7.6 | Fuse identification (marking, special fusing characteristics, cross-reference) .....: | No replaceable fuses | N/A |
| 1.7.7 | Wiring terminals | None | N/A |
| 1.7.7.1 | Protective earthing and bonding terminals .....: | | N/A |
| 1.7.7.2 | Terminals for a.c. mains supply conductors | | N/A |
| 1.7.7.3 | Terminals for d.c. mains supply conductors | | N/A |
| 1.7.8 | Controls and indicators | | N/A |

| EN 60950-1 | | | |
|---|---|---|---|
| Clause | Requirement + Test | Result - Remark | Verdict |
| 1.7.8.1 | Identification, location and marking .....: | | N/A |
| 1.7.8.2 | Colours .....: | | N/A |
| 1.7.8.3 | Symbols according to IEC 60417.....: | | N/A |
| 1.7.8.4 | Markings using figures .....: | | N/A |
| 1.7.9 | Isolation of multiple power sources .....: | | N/A |
| 1.7.10 | Thermostats and other regulating devices .....: | None | N/A |
| 1.7.11 | Durability | Test performed. Marking legible after test | P |
| 1.7.12 | Removable parts | No marking on removable parts | N/A |
| 1.7.13 | Replaceable batteries .....: | No replaceable batteries | N/A |
| | Language(s) .....: | | — |
| 1.7.14 | Equipment for restricted access locations .....: | | N/A |
| **2** | **PROTECTION FROM HAZARDS** | | P |
| 2.1 | Protection from electric shock and energy hazards | | P |
| 2.1.1 | Protection in operator access areas | SELV outputs | N/A |
| 2.1.1.1 | Access to energized parts | None | N/A |
| | Test by inspection .....: | | P |
| | Test with test finger (Figure 2A) .....: | | N/A |
| | Test with test pin (Figure 2B) .....: | | N/A |
| | Test with test probe (Figure 2C) .....: | | N/A |
| 2.1.1.2 | Battery compartments | None | N/A |
| 2.1.1.3 | Access to ELV wiring | | N/A |
| | Working voltage (Vpeak or Vrms); minimum distance through insulation (mm) | | — |
| 2.1.1.4 | Access to hazardous voltage circuit wiring | | N/A |
| 2.1.1.5 | Energy hazards .....: | | N/A |
| 2.1.1.6 | Manual controls | | N/A |
| 2.1.1.7 | Discharge of capacitors in equipment | | N/A |
| | Measured voltage (V); time-constant (s).....: | | — |
| 2.1.1.8 | Energy hazards – d.c. mains supply | | N/A |
| | a) Capacitor connected to the d.c. mains supply ..: | | N/A |
| | b) Internal battery connected to the d.c. mains supply .....: | | N/A |
| 2.1.1.9 | Audio amplifiers .....: | | N/A |

| EN 60950-1 | | | |
|---|---|---|---|
| Clause | Requirement + Test | Result - Remark | Verdict |
| 2.1.2 | Protection in service access areas | Statement provided to disconnect all power before servicing | P |
| 2.1.3 | Protection in restricted access locations | | N/A |
| **2.2** | **SELV circuits** | | P |
| 2.2.1 | General requirements | Covered by external Listed AC/DC power supply adaptor | P |
| 2.2.2 | Voltages under normal conditions (V) ..... : | SELV | P |
| 2.2.3 | Voltages under fault conditions (V) ..... : | SELV | P |
| 2.2.4 | Connection of SELV circuits to other circuits ..... : | SELV | P |
| **2.3** | **TNV circuits** | | N/A |
| 2.3.1 | Limits | No TNV circuitry | N/A |
| | Type of TNV circuits..... : | | — |
| 2.3.2 | Separation from other circuits and from accessible parts | | N/A |
| 2.3.2.1 | General requirements | | N/A |
| 2.3.2.2 | Protection by basic insulation | | N/A |
| 2.3.2.3 | Protection by earthing | | N/A |
| 2.3.2.4 | Protection by other constructions ..... : | | N/A |
| 2.3.3 | Separation from hazardous voltages | | N/A |
| | Insulation employed ..... : | | — |
| 2.3.4 | Connection of TNV circuits to other circuits | | N/A |
| | Insulation employed ..... : | | — |
| 2.3.5 | Test for operating voltages generated externally | | N/A |
| **2.4** | **Limited current circuits** | | N/A |
| 2.4.1 | General requirements | | N/A |
| 2.4.2 | Limit values | | N/A |
| | Frequency (Hz) ..... : | | — |
| | Measured current (mA) ..... : | | — |
| | Measured voltage (V)..... : | | — |
| | Measured circuit capacitance (nF or µF) ..... : | | — |
| 2.4.3 | Connection of limited current circuits to other circuits | | N/A |

| EN 60950-1 | | | |
|---|---|---|---|
| Clause | Requirement + Test | Result - Remark | Verdict |

| | | | |
|---|---|---|---|
| **2.5** | **Limited power sources** | | P |
| | a) Inherently limited output | Part of the LPS external listed AC/DC power supply | P |
| | b) Impedance limited output | | N/A |
| | c) Regulating network limited output under normal operating and single fault condition | | N/A |
| | d) Overcurrent protective device limited output | | N/A |
| | Max. output voltage (V), max. output current (A), max. apparent power (VA)..... : | | — |
| | Current rating of overcurrent protective device (A). | | — |
| | Use of integrated circuit (IC) current limiters | | |

| | | | |
|---|---|---|---|
| **2.6** | **Provisions for earthing and bonding** | | P |
| 2.6.1 | Protective earthing | No provision for earthing and bonding | N/A |
| 2.6.2 | Functional earthing | Considered | P |
| 2.6.3 | Protective earthing and protective bonding conductors | | N/A |
| 2.6.3.1 | General | | N/A |
| 2.6.3.2 | Size of protective earthing conductors | | N/A |
| | Rated current (A), cross-sectional area ($mm^2$), AWG..... : | | — |
| 2.6.3.3 | Size of protective bonding conductors | | N/A |
| | Rated current (A), cross-sectional area ($mm^2$), AWG..... : | | — |
| | Protective current rating (A), cross-sectional area ($mm^2$), AWG..... : | | |
| 2.6.3.4 | Resistance of earthing conductors and their terminations; resistance (Ω), voltage drop (V), test current (A), duration (min)..... : | | N/A |
| 2.6.3.5 | Colour of insulation ..... : | | N/A |
| 2.6.4 | Terminals | | N/A |
| 2.6.4.1 | General | | N/A |
| 2.6.4.2 | Protective earthing and bonding terminals | | N/A |
| | Rated current (A), type, nominal thread diameter (mm)..... : | | — |
| 2.6.4.3 | Separation of the protective earthing conductor from protective bonding conductors | | N/A |

| EN 60950-1 | | | |
|---|---|---|---|
| Clause | Requirement + Test | Result - Remark | Verdict |
| 2.6.5 | Integrity of protective earthing | | N/A |
| 2.6.5.1 | Interconnection of equipment | | N/A |
| 2.6.5.2 | Components in protective earthing conductors and protective bonding conductors | | N/A |
| 2.6.5.3 | Disconnection of protective earth | | N/A |
| 2.6.5.4 | Parts that can be removed by an operator | | N/A |
| 2.6.5.5 | Parts removed during servicing | | N/A |
| 2.6.5.6 | Corrosion resistance | | N/A |
| 2.6.5.7 | Screws for protective bonding | | N/A |
| 2.6.5.8 | Reliance on telecommunication network or cable distribution system | | N/A |
| **2.7** | **Overcurrent and earth fault protection in primary circuits** | | N/A |
| 2.7.1 | Basic requirements | No primary circuit | N/A |
| | Instructions when protection relies on building installation | | N/A |
| 2.7.2 | Faults not simulated in 5.3.7 | | N/A |
| 2.7.3 | Short-circuit backup protection | | N/A |
| 2.7.4 | Number and location of protective devices ..... : | | N/A |
| 2.7.5 | Protection by several devices | | N/A |
| 2.7.6 | Warning to service personnel ..... : | | N/A |
| **2.8** | **Safety interlocks** | | N/A |
| 2.8.1 | General principles | None | N/A |
| 2.8.2 | Protection requirements | | N/A |
| 2.8.3 | Inadvertent reactivation | | N/A |
| 2.8.4 | Fail-safe operation | | N/A |
| | Protection against extreme hazard | | N/A |
| 2.8.5 | Moving parts | | N/A |
| 2.8.6 | Overriding | | N/A |
| 2.8.7 | Switches, relays and their related circuits | | N/A |
| 2.8.7.1 | Separation distances for contact gaps and their related circuits (mm) ..... : | | N/A |
| 2.8.7.2 | Overload test | | N/A |
| 2.8.7.3 | Endurance test | | N/A |
| 2.8.7.4 | Electric strength test | | N/A |

| EN 60950-1 | | | |
|---|---|---|---|
| Clause | Requirement + Test | Result - Remark | Verdict |
| 2.8.8 | Mechanical actuators | | N/A |
| **2.9** | **Electrical insulation** | | P |
| 2.9.1 | Properties of insulating materials | | P |
| 2.9.2 | Humidity conditioning | | P |
| | Relative humidity (%), temperature (°C) ..... : | | — |
| 2.9.3 | Grade of insulation | Functional insulation | P |
| 2.9.4 | Separation from hazardous voltages | | N/A |
| | Method(s) used ..... : | | — |
| **2.10** | **Clearances, creepage distances and distances through insulation** | | P |
| 2.10.1 | General | | N/A |
| 2.10.1.1 | Frequency ..... : | DC equipment | N/A |
| 2.10.1.2 | Pollution degrees ..... : | Pollution Degree II | N/A |
| 2.10.1.3 | Reduced values for functional insualtion | | P |
| 2.10.1.4 | Intervening unconnected conductive parts | | N/A |
| 2.10.1.5 | Insulation with varying dimensions | | N/A |
| 2.10.1.6 | Special separation requirements | | N/A |
| 2.10.1.7 | Insulation in circuits generating starting pulses | | N/A |
| 2.10.2 | Determination of working voltage | 24VDC POE. Through external AC/DC power supply adaptor. | N/A |
| 2.10.2.1 | General | | N/A |
| 2.10.2.2 | RMS working voltage | | N/A |
| 2.10.2.3 | Peak working voltage | | N/A |
| 2.10.3 | Clearances | Covered by external power supply adaptor. | N/A |
| 2.10.3.1 | General | Covered by external power supply adaptor. | N/A |
| 2.10.3.2 | Mains transient voltages | | N/A |
| | a) AC mains supply ..... : | | N/A |
| | b) Earthed d.c. mains supplies ..... : | | N/A |
| | c) Unearthed d.c. mains supplies ..... : | | N/A |
| | d) Battery operation ..... : | | N/A |
| 2.10.3.3 | Clearances in primary circuits | Not primary circuit | N/A |
| 2.10.3.4 | Clearances in secondary circuits | Covered by external power supply adaptor. | N/A |

| EN 60950-1 | | | |
|---|---|---|---|
| Clause | Requirement + Test | Result - Remark | Verdict |
| 2.10.3.5 | Clearances in circuits having starting pulses | | N/A |
| 2.10.3.6 | Transients from a.c. mains supply ..... : | | N/A |
| 2.10.3.7 | Transients from d.c. mains supply ..... : | | N/A |
| 2.10.3.8 | Transients from telecommunication networks and cable distribution systems ..... : | | N/A |
| 2.10.3.9 | Measurement of transient voltage levels | | N/A |
| | a) Transients from a mains supply | | N/A |
| | For an a.c. mains supply ..... : | | N/A |
| | For a d.c. mains supply ..... : | | N/A |
| | b) Transients from a telecommunication network : | | N/A |
| 2.10.4 | Creepage distances | Covered by external power supply adaptor. | N/A |
| 2.10.4.1 | General | | N/A |
| 2.10.4.2 | Material group and comparative tracking index | | N/A |
| | CTI tests ..... : | Material group IIIb is assumed to be used | — |
| 2.10.4.3 | Minimum creepage distances | | N/A |
| **2.10.5** | **Solid insulation** | None | N/A |
| 2.10.5.1 | General | | N/A |
| 2.10.5.2 | Distances through insulation | | N/A |
| 2.10.5.3 | Insulating compound as solid insulation | | N/A |
| 2.10.5.4 | Semiconductor devices | | N/A |
| 2.10.5.5. | Cemented joints | | N/A |
| 2.10.5.6 | Thin sheet material – General | | N/A |
| 2.10.5.7 | Separable thin sheet material | | N/A |
| | Number of layers (pcs)..... : | | — |
| 2.10.5.8 | Non-separable thin sheet material | | N/A |
| 2.10.5.9 | Thin sheet material – standard test procedure | | N/A |
| | Electric strength test | | — |
| 2.10.5.10 | Thin sheet material – alternative test procedure | | N/A |
| | Electric strength test | | — |
| 2.10.5.11 | Insulation in wound components | | N/A |
| 2.10.5.12 | Wire in wound components | | N/A |
| | Working voltage ..... : | | N/A |
| | a) Basic insulation not under stress ..... : | | N/A |
| | b) Basic, supplementary, reinforced insulation ..... : | | N/A |

| EN 60950-1 | | | |
|---|---|---|---|
| Clause | Requirement + Test | Result - Remark | Verdict |
| | c) Compliance with Annex U ..... : | | N/A |
| | Two wires in contact inside wound component; angle between 45° and 90° ..... : | | N/A |
| 2.10.5.13 | Wire with solvent-based enamel in wound components | | N/A |
| | Electric strength test | | — |
| | Routine test | | N/A |
| 2.10.5.14 | Additional insulation in wound components | | N/A |
| | Working voltage ..... : | | N/A |
| | - Basic insulation not under stress ..... : | | N/A |
| | - Supplementary, reinforced insulation ..... : | | N/A |
| **2.10.6** | **Construction of printed boards** | None | N/A |
| 2.10.6.1 | Uncoated printed boards | | N/A |
| 2.10.6.2 | Coated printed boards | | N/A |
| 2.10.6.3 | Insulation between conductors on the same inner surface of a printed board | | N/A |
| 2.10.6.4 | Insulation between conductors on different layers of a printed board | | N/A |
| | Distance through insulation | | N/A |
| | Number of insulation layers (pcs) ..... : | | N/A |
| **2.10.7** | **Component external terminations** | **None** | N/A |
| 2.10.8 | Tests on coated printed boards and coated components | | N/A |
| 2.10.8.1 | Sample preparation and preliminary inspection | | N/A |
| 2.10.8.2 | Thermal conditioning | | N/A |
| 2.10.8.3 | Electric strength test | | N/A |
| 2.10.8.4 | Abrasion resistance test | | N/A |
| 2.10.9 | Thermal cycling | | N/A |
| 2.10.10 | Test for Pollution Degree 1 environment and insulating compound | | N/A |
| 2.10.11 | Tests for semiconductor devices and cemented joints | | N/A |
| 2.10.12 | Enclosed and sealed parts | | N/A |

| | | |
|---|---|---|
| **3** | **WIRING, CONNECTIONS AND SUPPLY** | P |
| 3.1 | General | P |

| EN 60950-1 | | | |
|---|---|---|---|
| Clause | Requirement + Test | Result - Remark | Verdict |
| 3.1.1 | Current rating and overcurrent protection | 0.5A current rating and overcurrent protection device part of the external Listed AC/DC power supply | P |
| 3.1.2 | Protection against mechanical damage | POE wire not subject to mechanical damage | N/A |
| 3.1.3 | Securing of internal wiring | No internal wiring | N/A |
| 3.1.4 | Insulation of conductors | | N/A |
| 3.1.5 | Beads and ceramic insulators | None | N/A |
| 3.1.6 | Screws for electrical contact pressure | | N/A |
| 3.1.7 | Insulating materials in electrical connections | | P |
| 3.1.8 | Self-tapping and spaced thread screws | None | N/A |
| 3.1.9 | Termination of conductors | | N/A |
| | 10 N pull test | | N/A |
| 3.1.10 | Sleeving on wiring | None | N/A |
| **3.2** | **Connection to a mains supply** | | N/A |
| 3.2.1 | Means of connection | No connection to mains. External Listed AC/DC power supply is connected to mains, providing power through POE to equipment | N/A |
| 3.2.1.1 | Connection to an a.c. mains supply | No connection to mains. External Listed AC/DC power supply is connected to mains, providing power through POE to equipment | N/A |
| 3.2.1.2 | Connection to a d.c. mains supply | | N/A |
| 3.2.2 | Multiple supply connections | | N/A |
| 3.2.3 | Permanently connected equipment | | N/A |
| | Number of conductors, diameter of cable and conduits (mm) .....: | | — |
| 3.2.4 | Appliance inlets | No appliance inlet | N/A |
| 3.2.5 | Power supply cords | Part of the listed AC/DC power supply | N/A |
| 3.2.5.1 | AC power supply cords | | N/A |
| | Type .....: | | — |
| | Rated current (A), cross-sectional area ($mm^2$), AWG .....: | | — |
| 3.2.5.2 | DC power supply cords | | N/A |

| EN 60950-1 | | | |
|---|---|---|---|
| Clause | Requirement + Test | Result - Remark | Verdict |
| 3.2.6 | Cord anchorages and strain relief | | N/A |
| | Mass of equipment (kg), pull (N) .....: | | — |
| | Longitudinal displacement (mm) .....: | | — |
| 3.2.7 | Protection against mechanical damage | | N/A |
| 3.2.8 | Cord guards | | N/A |
| | Diameter or minor dimension D (mm); test mass (g) .....: | | — |
| | Radius of curvature of cord (mm) .....: | | — |
| 3.2.9 | Supply wiring space | | N/A |
| **3.3** | **Wiring terminals for connection of external conductors** | | N/A |
| 3.3.1 | Wiring terminals | None | N/A |
| 3.3.2 | Connection of non-detachable power supply cords | | N/A |
| 3.3.3 | Screw terminals | | N/A |
| 3.3.4 | Conductor sizes to be connected | | N/A |
| | Rated current (A), cord/cable type, cross-sectional area ($mm^2$) .....: | | — |
| 3.3.5 | Wiring terminal sizes | | N/A |
| | Rated current (A), type, nominal thread diameter (mm) .....: | | — |
| 3.3.6 | Wiring terminal design | | N/A |
| 3.3.7 | Grouping of wiring terminals | | N/A |
| 3.3.8 | Stranded wire | | N/A |
| **3.4** | **Disconnection from the mains supply** | | P |
| 3.4.1 | General requirement | Part of the external Listed AC/DC power supply | P |
| 3.4.2 | Disconnect devices | Part of the external Listed AC/DC power supply | P |
| 3.4.3 | Permanently connected equipment | | N/A |
| 3.4.4 | Parts which remain energized | None | N/A |
| 3.4.5 | Switches in flexible cords | None | N/A |
| 3.4.6 | Number of poles - single-phase and d.c. equipment | | N/A |
| 3.4.7 | Number of poles - three-phase equipment | | N/A |
| 3.4.8 | Switches as disconnect devices | None | N/A |
| 3.4.9 | Plugs as disconnect devices | Part of the external Listed AC/DC power supply | P |

| EN 60950-1 | | | |
|---|---|---|---|
| Clause | Requirement + Test | Result - Remark | Verdict |
| 3.4.10 | Interconnected equipment | | N/A |
| 3.4.11 | Multiple power sources | | N/A |
| **3.5** | **Interconnection of equipment** | | P |
| 3.5.1 | General requirements | | P |
| 3.5.2 | Types of interconnection circuits ..... : | SELV to SELV | P |
| 3.5.3 | ELV circuits as interconnection circuits | | N/A |
| 3.5.4 | Data ports for additional equipment | LPS | P |
| **4** | **PHYSICAL REQUIREMENTS** | | P |
| 4.1 | Stability | | N/A |
| | Angle of 10° | Not floor-standing equipment. | N/A |
| | Test force (N) ..... : | | N/A |
| **4.2** | **Mechanical strength** | | N/A |
| 4.2.1 | General | | N/A |
| | Rack-mounted equipment. | Not rack mounted equipment | N/A |
| 4.2.2 | Steady force test, 10 N | | N/A |
| 4.2.3 | Steady force test, 30 N | | N/A |
| 4.2.4 | Steady force test, 250 N | Equipment is powered with 24V, 0.5A maximum power. | N/A |
| 4.2.5 | Impact test | Equipment is powered with 24V, 0.5A maximum power. | N/A |
| | Fall test | Equipment is powered with 24V, 0.5A maximum power. | N/A |
| | Swing test | | N/A |
| 4.2.6 | Drop test; height (mm) ..... : | | N/A |
| 4.2.7 | Stress relief test | | N/A |
| 4.2.8 | Cathode ray tubes | No CRTs | N/A |
| | Picture tube separately certified ..... : | | N/A |
| 4.2.9 | High pressure lamps | None | N/A |
| 4.2.10 | Wall or ceiling mounted equipment; force (N) ..... : | Not such equipment | N/A |
| 4.2.11 | Rotating solid media | None | N/A |
| | Test to cover on the door……: | | N/A |
| **4.3** | **Design and construction** | | P |

| EN 60950-1 | | | |
|---|---|---|---|
| Clause | Requirement + Test | Result - Remark | Verdict |
| 4.3.1 | Edges and corners | Soft edges and round corners | P |
| 4.3.2 | Handles and manual controls; force (N) .....: | None | N/A |
| 4.3.3 | Adjustable controls | None | N/A |
| 4.3.4 | Securing of parts | Well secured | P |
| 4.3.5 | Connection by plugs and sockets | No such connections | N/A |
| 4.3.6 | Direct plug-in equipment | | N/A |
| | Torque ..... : | | — |
| | Compliance with the relevant mains plug standard ..... : | | N/A |
| 4.3.7 | Heating elements in earthed equipment | None | N/A |
| 4.3.8 | Batteries | | P |
| | - Overcharging of a rechargeable battery | Refer to Illustration 1 | P |
| | - Unintentional charging of a non-rechargeable battery | Rechargeable battery | N/A |
| | - Reverse charging of a rechargeable battery | Covered by construction. | P |
| | - Excessive discharging rate for any battery | Refer to illustration 1 | P |
| 4.3.9 | Oil and grease | No oil and grease | N/A |
| 4.3.10 | Dust, powders, liquids and gases | None | N/A |
| 4.3.11 | Containers for liquids or gases | No such containers | N/A |
| 4.3.12 | Flammable liquids ..... : | No flammable liquids | N/A |
| | Quantity of liquid (l) ..... : | | N/A |
| | Flash point (°C) ..... : | | N/A |
| 4.3.13 | Radiation | No radiation | N/A |
| 4.3.13.1 | General | | N/A |
| 4.3.13.2 | Ionizing radiation | | N/A |
| | Measured radiation (pA/kg) ..... : | | — |
| | Measured high-voltage (kV) ..... : | | — |
| | Measured focus voltage (kV) ..... : | | — |
| | CRT markings ..... : | | — |
| 4.3.13.3 | Effect of ultraviolet (UV) radiation on materials | No UV | N/A |
| | Part, property, retention after test, flammability classification ..... : | | N/A |
| 4.3.13.4 | Human exposure to ultraviolet (UV) radiation ..... : | No UV | N/A |
| 4.3.13.5 | Lasers (including laser diodes) and LEDs | | N/A |
| 4.3.13.5.1 | Lasers (including laser diodes) | | N/A |

| EN 60950-1 | | | |
|---|---|---|---|
| Clause | Requirement + Test | Result - Remark | Verdict |

| | | | |
|---|---|---|---|
| | Laser class ..... : | | — |
| 4.3.13.5.2 | Light emitting diodes (LEDs) | No LED lasers | |
| 4.3.13.6 | Other types ..... : | | N/A |

| | | | |
|---|---|---|---|
| **4.4** | **Protection against hazardous moving parts** | | N/A |
| 4.4.1 | General | No moving parts. | N/A |
| 4.4.2 | Protection in operator access areas ..... : | | N/A |
| | Household and home/office document/media shredders | | N/A |
| 4.4.3 | Protection in restricted access locations ..... : | | N/A |
| 4.4.4 | Protection in service access areas | | N/A |
| 4.4.5 | Protection against moving fan blades | | N/A |
| 4.4.5.1 | General | | N/A |
| | Not considered to cause pain or injury. a)……..: | | N/A |
| | Is considered to cause pain, not injury. b) ……: | | N/A |
| | Considered to cause injury. c) ……: | | N/A |
| 4.4.5.2 | Protection for users | | N/A |
| | Use of symbol or warning ……: | | N/A |
| 4.4.5.3 | Protection for service persons | | N/A |
| | Use of symbol or warning ……: | | N/A |

| | | | |
|---|---|---|---|
| **4.5** | **Thermal requirements** | | P |
| 4.5.1 | General | | P |
| 4.5.2 | Temperature tests | Test Conducted. Refer to test data.<br>Annex L.7 applies. Operated in the most unfavorable way of operation given in the operation instructions until steady conditions established. | P |
| | Normal load condition per Annex L ..... : | | — |
| 4.5.3 | Temperature limits for materials | (see appended table 4.5) | P |
| 4.5.4 | Touch temperature limits | (see appended table 4.5) | P |

| EN 60950-1 | | | |
|---|---|---|---|
| Clause | Requirement + Test | Result - Remark | Verdict |
| 4.5.5 | Resistance to abnormal heat ..... : | | N/A |
| 4.6 | Openings in enclosures | | N/A |
| 4.6.1 | Top and side openings | No opening in enclosure | N/A |
| | Dimensions (mm) ..... : | | — |
| 4.6.2 | Bottoms of fire enclosures | | N/A |
| | Construction of the bottom, dimensions (mm) ..... : | | — |
| 4.6.3 | Doors or covers in fire enclosures | | N/A |
| 4.6.4 | Openings in transportable equipment | | N/A |
| 4.6.4.1 | Constructional design measures | | N/A |
| | Dimensions (mm) ..... : | | — |
| 4.6.4.2 | Evaluation measures for larger openings | | N/A |
| 4.6.4.3 | Use of metalized parts | | N/A |
| 4.6.5 | Adhesives for constructional purposes | | N/A |
| | Conditioning temperature (°C), time (weeks) ..... : | | — |
| **4.7** | **Resistance to fire** | | N/A |
| 4.7.1 | Reducing the risk of ignition and spread of flame | No possibility of fire ignition | N/A |
| | Method 1, selection and application of components wiring and materials | | N/A |
| | Method 2, application of all of simulated fault condition tests | | N/A |
| 4.7.2 | Conditions for a fire enclosure | | N/A |
| 4.7.2.1 | Parts requiring a fire enclosure | | N/A |
| 4.7.2.2 | Parts not requiring a fire enclosure | | N/A |
| 4.7.3 | Materials | | N/A |
| 4.7.3.1 | General | | N/A |
| 4.7.3.2 | Materials for fire enclosures | | N/A |
| 4.7.3.3 | Materials for components and other parts outside fire enclosures | | N/A |
| 4.7.3.4 | Materials for components and other parts inside fire enclosures | | N/A |
| 4.7.3.5 | Materials for air filter assemblies | | N/A |
| 4.7.3.6 | Materials used in high-voltage components | | N/A |
| **5** | **ELECTRICAL REQUIREMENTS AND SIMULATED ABNORMAL CONDITIONS** | | **N/A** |
| 5.1 | **Touch current and protective conductor current** | | N/A |

| EN 60950-1 | | | |
|---|---|---|---|
| Clause | Requirement + Test | Result - Remark | Verdict |
| 5.1.1 | General | DC equipment. | N/A |
| 5.1.2 | Configuration of equipment under test (EUT) | | N/A |
| 5.1.2.1 | Single connection to an a.c. mains supply | | N/A |
| 5.1.2.2 | Redundant multiple connections to an a.c. mains supply | | N/A |
| 5.1.2.3 | Simultaneous multiple connections to an a.c. mains supply | | N/A |
| 5.1.3 | Test circuit | | N/A |
| 5.1.4 | Application of measuring instrument | | N/A |
| 5.1.5 | Test procedure | | N/A |
| 5.1.6 | Test measurements | | N/A |
| | Supply voltage (V) .....: | | — |
| | Measured touch current (mA) .....: | | — |
| | Max. allowed touch current (mA) .....: | | — |
| | Measured protective conductor current (mA) .....: | | — |
| | Max. allowed protective conductor current (mA) ..: | | — |
| 5.1.7 | Equipment with touch current exceeding 3,5 mA | | N/A |
| 5.1.7.1 | General .....: | | N/A |
| 5.1.7.2 | Simultaneous multiple connections to the supply | | N/A |
| 5.1.8 | Touch currents to telecommunication networks and cable distribution systems and from telecommunication networks | | N/A |
| 5.1.8.1 | Limitation of the touch current to a telecommunication network or to a cable distribution system | | N/A |
| | Supply voltage (V) .....: | | — |
| | Measured touch current (mA) .....: | | — |
| | Max. allowed touch current (mA) .....: | | — |
| 5.1.8.2 | Summation of touch currents from telecommunication networks | | N/A |
| | a) EUT with earthed telecommunication ports .....: | | N/A |
| | b) EUT whose telecommunication ports have no reference to protective earth | | N/A |

| | | | |
|---|---|---|---|
| **5.2** | **Electric strength** | | N/A |
| 5.2.1 | General | | N/A |
| 5.2.2 | Test procedure | | N/A |

| EN 60950-1 | | | |
|---|---|---|---|
| Clause | Requirement + Test | Result - Remark | Verdict |

| | | | |
|---|---|---|---|
| **5.3** | **Abnormal operating and fault conditions** | | N/A |
| 5.3.1 | Protection against overload and abnormal operation | | N/A |
| 5.3.2 | Motors | | N/A |
| 5.3.3 | Transformers | | N/A |
| 5.3.4 | Functional insulation ..... : | | N/A |
| 5.3.5 | Electromechanical components | | N/A |
| 5.3.6 | Audio amplifiers in ITE ..... : | | N/A |
| 5.3.7 | Simulation of faults | | N/A |
| 5.3.8 | Unattended equipment | | N/A |
| 5.3.9 | Compliance criteria for abnormal operating and fault conditions | | N/A |
| 5.3.9.1 | During the tests | | N/A |
| 5.3.9.2 | After the tests | | N/A |

| EN 60950-1 | | | |
|---|---|---|---|
| Clause | Requirement + Test | Result - Remark | Verdict |

| | | | |
|---|---|---|---|
| **6** | **CONNECTION TO TELECOMMUNICATION NETWORKS** | | N/A |
| 6.1 | Protection of telecommunication network service persons, and users of other equipment connected to the network, from hazards in the equipment | | N/A |
| 6.1.1 | Protection from hazardous voltages | | N/A |
| 6.1.2 | Separation of the telecommunication network from earth | | N/A |
| 6.1.2.1 | Requirements | No TNV | N/A |
| | Supply voltage (V) ..... : | | — |
| | Current in the test circuit (mA) ..... : | | — |
| 6.1.2.2 | Exclusions ..... : | | N/A |

| | | | |
|---|---|---|---|
| **6.2** | **Protection of equipment users from overvoltages on telecommunication networks** | | N/A |
| 6.2.1 | Separation requirements | No TNV | N/A |
| 6.2.2 | Electric strength test procedure | | N/A |
| 6.2.2.1 | Impulse test | | N/A |
| 6.2.2.2 | Steady-state test | | N/A |
| 6.2.2.3 | Compliance criteria | | N/A |

| | | | |
|---|---|---|---|
| **6.3** | **Protection of the telecommunication wiring system from overheating** | | N/A |
| | Max. output current (A) ..... : | No TNV | — |
| | Current limiting method ..... : | | — |

| | | | |
|---|---|---|---|
| **7** | **CONNECTION TO CABLE DISTRIBUTION SYSTEMS** | | N/A |
| 7.1 | General | No Cable Distribution System | N/A |
| 7.2 | Protection of cable distribution system service persons, and users of other equipment connected to the system, from hazardous voltages in the equipment | | N/A |
| 7.3 | Protection of equipment users from overvoltages on the cable distribution system | | N/A |
| 7.4 | Insulation between primary circuits and cable distribution systems | | N/A |
| 7.4.1 | General | | N/A |
| 7.4.2 | Voltage surge test | | N/A |
| 7.4.3 | Impulse test | | N/A |

| EN 60950-1 | | | |
|---|---|---|---|
| Clause | Requirement + Test | Result - Remark | Verdict |

| | | | |
|---|---|---|---|
| **A** | **ANNEX A, TESTS FOR RESISTANCE TO HEAT AND FIRE** | | N/A |
| A.1 | Flammability test for fire enclosures of movable equipment having a total mass exceeding 18 kg, and of stationary equipment (see 4.7.3.2) | No risk of ignition of fire. The equipment does not require fire enclosure. The equipment has maximum power of 10W | N/A |
| A.1.1 | Samples ..... : | | — |
| | Wall thickness (mm)..... : | | — |
| A.1.2 | Conditioning of samples; temperature (°C) ..... : | | N/A |
| A.1.3 | Mounting of samples ..... : | | N/A |
| A.1.4 | Test flame (see IEC 60695-11-3) | | N/A |
| | Flame A, B, C or D ..... : | | — |
| A.1.5 | Test procedure | | N/A |
| A.1.6 | Compliance criteria | | N/A |
| | Sample 1 burning time (s)..... : | | — |
| | Sample 2 burning time (s)..... : | | — |
| | Sample 3 burning time (s)..... : | | — |
| A.2 | Flammability test for fire enclosures of movable equipment having a total mass not exceeding 18 kg, and for material and components located inside fire enclosures (see 4.7.3.2 and 4.7.3.4) | | N/A |
| A.2.1 | Samples, material ..... : | | — |
| | Wall thickness (mm)..... : | | — |
| A.2.2 | Conditioning of samples; temperature (°C) ..... : | | N/A |
| A.2.3 | Mounting of samples ..... : | | N/A |
| A.2.4 | Test flame (see IEC 60695-11-4) | | N/A |
| | Flame A, B or C ..... : | | — |
| A.2.5 | Test procedure | | N/A |
| A.2.6 | Compliance criteria | | N/A |
| | Sample 1 burning time (s)..... : | | — |
| | Sample 2 burning time (s)..... : | | — |
| | Sample 3 burning time (s)..... : | | — |
| A.2.7 | Alternative test acc. to IEC 60695-11-5, cl. 5 and 9 | | N/A |
| | Sample 1 burning time (s)..... : | | — |
| | Sample 2 burning time (s)..... : | | — |
| | Sample 3 burning time (s)..... : | | — |
| A.3 | Hot flaming oil test (see 4.6.2) | | N/A |

| EN 60950-1 | | | |
|---|---|---|---|
| Clause | Requirement + Test | Result - Remark | Verdict |
| A.3.1 | Mounting of samples | | N/A |
| A.3.2 | Test procedure | | N/A |
| A.3.3 | Compliance criterion | | N/A |
| **B** | **ANNEX B, MOTOR TESTS UNDER ABNORMAL CONDITIONS** | | N/A |
| B.1 | General requirements | No such motor. | N/A |
| | Position ..... : | | — |
| | Manufacturer ..... : | | — |
| | Type ..... : | | — |
| | Rated values ..... : | | — |
| B.2 | Test conditions | | N/A |
| B.3 | Maximum temperatures | | N/A |
| B.4 | Running overload test | | N/A |
| B.5 | Locked-rotor overload test | | N/A |
| | Test duration (days) ..... : | | — |
| | Electric strength test: test voltage (V) ..... : | | — |
| B.6 | Running overload test for d.c. motors in secondary circuits | | N/A |
| B.6.1 | General | | N/A |
| B.6.2 | Test procedure | | N/A |
| B.6.3 | Alternative test procedure | | N/A |
| B.6.4 | Electric strength test; test voltage (V) ..... : | | N/A |
| B.7 | Locked-rotor overload test for d.c. motors in secondary circuits | | N/A |
| B.7.1 | General | | N/A |
| B.7.2 | Test procedure | | N/A |
| B.7.3 | Alternative test procedure | | N/A |
| B.7.4 | Electric strength test; test voltage (V) ..... : | | N/A |
| B.8 | Test for motors with capacitors | | N/A |
| B.9 | Test for three-phase motors | | N/A |
| B.10 | Test for series motors | | N/A |
| | Operating voltage (V) ..... : | | — |
| **C** | **ANNEX C, TRANSFORMERS** | | N/A |
| | Position ..... : | | — |

| EN 60950-1 | | | |
|---|---|---|---|
| Clause | Requirement + Test | Result - Remark | Verdict |
| | Manufacturer ..... : | | — |
| | Type ..... : | | — |
| | Rated values ..... : | | — |
| | Method of protection ..... : | | — |
| C.1 | Overload test | | N/A |
| C.2 | Insulation | | N/A |
| | Protection from displacement of windings ..... : | | N/A |
| **D** | **ANNEX D, MEASURING INSTRUMENTS FOR TOUCH-CURRENT TESTS** | | N/A |
| D.1 | Measuring instrument | DC equipment | N/A |
| D.2 | Alternative measuring instrument | | N/A |
| **E** | **ANNEX E, TEMPERATURE RISE OF A WINDING** | | N/A |
| **F** | **ANNEX F, MEASUREMENT OF CLEARANCES AND CREEPAGE DISTANCES** | | N/A |
| **G** | **ANNEX G, ALTERNATIVE METHOD FOR DETERMINING MINIMUM CLEARANCES** | | N/A |
| G.1 | Clearances | | N/A |
| G.1.1 | General | | N/A |
| G.1.2 | Summary of the procedure for determining minimum clearances | | N/A |
| G.2 | Determination of mains transient voltage (V) | | N/A |
| G.2.1 | AC mains supply ..... : | | N/A |
| G.2.2 | Earthed d.c. mains supplies ..... : | | N/A |
| G.2.3 | Unearthed d.c. mains supplies ..... : | | N/A |
| G.2.4 | Battery operation ..... : | | N/A |
| G.3 | Determination of telecommunication network transient voltage (V) ..... : | | N/A |
| G.4 | Determination of required withstand voltage (V) | | N/A |
| G.4.1 | Mains transients and internal repetitive peaks .... : | | N/A |
| G.4.2 | Transients from telecommunication networks ..... : | | N/A |
| G.4.3 | Combination of transients | | N/A |
| G.4.4 | Transients from cable distribution systems | | N/A |
| G.5 | Measurement of transient voltages (V) | | N/A |

| EN 60950-1 | | | |
|---|---|---|---|
| Clause | Requirement + Test | Result - Remark | Verdict |
| | a) Transients from a mains supply | | N/A |
| | For an a.c. mains supply | | N/A |
| | For a d.c. mains supply | | |
| | b) Transients from a telecommunication network | | N/A |
| G.6 | Determination of minimum clearances .....: | | N/A |
| **H** | **ANNEX H, IONIZING RADIATION** | | N/A |
| **J** | **ANNEX J, TABLE OF ELECTROCHEMICAL POTENTIALS** | | N/A |
| | Metal(s) used .....: | No metal enclosure | — |
| **K** | **ANNEX K, THERMAL CONTROLS** | | N/A |
| K.1 | Making and breaking capacity | No thermal controls | N/A |
| K.2 | Thermostat reliability; operating voltage (V) .....: | | N/A |
| K.3 | Thermostat endurance test; operating voltage (V) .....: | | N/A |
| K.4 | Temperature limiter endurance; operating voltage (V) .....: | | N/A |
| K.5 | Thermal cut-out reliability | | N/A |
| K.6 | Stability of operation | | N/A |
| **L** | **ANNEX L, NORMAL LOAD CONDITIONS FOR SOME TYPES OF ELECTRICAL BUSINESS EQUIPMENT** | | P |
| L.1 | Typewriters | | N/A |
| L.2 | Adding machines and cash registers | | N/A |
| L.3 | Erasers | | N/A |
| L.4 | Pencil sharpeners | | N/A |
| L.5 | Duplicators and copy machines | | N/A |
| L.6 | Motor-operated files | | N/A |
| L.7 | Other business equipment | Wireless Router | P |
| **M** | **ANNEX M, CRITERIA FOR TELEPHONE RINGING SIGNALS** | | N/A |
| M.1 | Introduction | No TNV Circuitry | N/A |
| M.2 | Method A | | N/A |
| M.3 | Method B | | N/A |
| M.3.1 | Ringing signal | | N/A |

| EN 60950-1 | | | |
|---|---|---|---|
| Clause | Requirement + Test | Result - Remark | Verdict |
| M.3.1.1 | Frequency (Hz) ..... : | | — |
| M.3.1.2 | Voltage (V) ..... : | | — |
| M.3.1.3 | Cadence; time (s), voltage (V) ..... : | | — |
| M.3.1.4 | Single fault current (mA) ..... : | | — |
| M.3.2 | Tripping device and monitoring voltage ..... : | | N/A |
| M.3.2.1 | Conditions for use of a tripping device or a monitoring voltage | | N/A |
| M.3.2.2 | Tripping device | | N/A |
| M.3.2.3 | Monitoring voltage (V) ..... : | | N/A |
| **N** | **ANNEX N, IMPULSE TEST GENERATORS** | | N/A |
| N.1 | ITU-T impulse test generators | | N/A |
| N.2 | IEC 60065 impulse test generator | | N/A |
| **P** | **ANNEX P, NORMATIVE REFERENCES** | | — |
| **Q** | **ANNEX Q, Voltage dependent resistors (VDRs)** | | N/A |
| | a) Preferred climatic categories ..... : | | N/A |
| | b) Maximum continuous voltage ..... : | | N/A |
| | c) Pulse current ..... : | | N/A |
| **R** | **ANNEX R, EXAMPLES OF REQUIREMENTS FOR QUALITY CONTROL PROGRAMMES** | | N/A |
| R.1 | Minimum separation distances for unpopulated coated printed boards (see 2.10.6.2) | | N/A |
| R.2 | Reduced clearances (see 2.10.3) | | N/A |
| **S** | **ANNEX S, PROCEDURE FOR IMPULSE TESTING** | | N/A |
| S.1 | Test equipment | | N/A |
| S.2 | Test procedure | | N/A |
| S.3 | Examples of waveforms during impulse testing | | N/A |
| **T** | **ANNEX T, GUIDANCE ON PROTECTION AGAINST INGRESS OF WATER** | | N/A |
| | | | — |

| EN 60950-1 | | | |
|---|---|---|---|
| Clause | Requirement + Test | Result - Remark | Verdict |

| | | | |
|---|---|---|---|
| **U** | **ANNEX U, INSULATED WINDING WIRES FOR USE WITHOUT INTERLEAVED INSULATION** | | N/A |
| | | | — |

| | | | |
|---|---|---|---|
| **V** | **ANNEX V, AC POWER DISTRIBUTION SYSTEMS** | | N/A |
| V.1 | Introduction | | N/A |
| V.2 | TN power distribution systems | | N/A |

| | | | |
|---|---|---|---|
| **W** | **ANNEX W, SUMMATION OF TOUCH CURRENTS** | | N/A |
| W.1 | Touch current from electronic circuits | DC equipment | N/A |
| W.1.1 | Floating circuits | | N/A |
| W.1.2 | Earthed circuits | | N/A |
| W.2 | Interconnection of several equipments | | N/A |
| W.2.1 | Isolation | | N/A |
| W.2.2 | Common return, isolated from earth | | N/A |
| W.2.3 | Common return, connected to protective earth | | N/A |

| | | | |
|---|---|---|---|
| **X** | **ANNEX X, MAXIMUM HEATING EFFECT IN TRANSFORMER TESTS** | | N/A |
| X.1 | Determination of maximum input current | | N/A |
| X.2 | Overload test procedure | | N/A |

| | | | |
|---|---|---|---|
| **Y** | **ANNEX Y, ULTRAVIOLET LIGHT CONDITIONING TEST** | | N/A |
| Y.1 | Test apparatus .....: | No UV | N/A |
| Y.2 | Mounting of test samples .....: | | N/A |
| Y.3 | Carbon-arc light-exposure apparatus .....: | | N/A |
| Y.4 | Xenon-arc light exposure apparatus .....: | | N/A |

| | | |
|---|---|---|
| **Z** | **ANNEX Z, OVERVOLTAGE CATEGORIES** | N/A |

| | | |
|---|---|---|
| **AA** | **ANNEX AA, MANDREL TEST** | N/A |

| | | |
|---|---|---|
| **BB** | **ANNEX BB, CHANGES IN THE SECOND EDITION** | — |

| | | |
|---|---|---|
| **CC** | **ANNEX CC, Evaluation of integrated circuit (IC) current limiters** | N/A |

| EN 60950-1 | | | |
|---|---|---|---|
| Clause | Requirement + Test | Result - Remark | Verdict |
| CC.1 | General | | N/A |
| CC.2 | Test program 1……..: | | N/A |
| CC.3 | Test program 2……..: | | N/A |
| **DD** | **ANNEX DD, Requirements for the mounting means of rack-mounted equipment** | | N/A |
| DD.1 | General | | N/A |
| DD.2 | Mechanical strength test, variable N……..: | | N/A |
| DD.3 | Mechanical strength test, 250N, including end stops……..: | | N/A |
| DD.4 | Compliance……..: | | N/A |
| **EE** | **ANNEX EE, Household and home/office document/media shredders** | | N/A |
| EE.1 | General | | N/A |
| EE.2 | Markings and instructions | | N/A |
| | Use of markings or symbols……..: | | N/A |
| | Information of user instructions, maintenance and/or servicing instructions……..: | | N/A |
| EE.3 | Inadvertent reactivation test……..: | | N/A |
| EE.4 | Disconnection of power to hazardous moving parts: | | N/A |
| | Use of markings or symbols……..: | | N/A |
| EE.5 | Protection against hazardous moving parts | | N/A |
| | Test with test finger (Figure 2A) ……..: | | N/A |
| | Test with wedge probe (Figure EE1 and EE2) ……: | | N/A |

| EN 60950-1 | | | |
|---|---|---|---|
| Clause | Requirement + Test | Result - Remark | Verdict |

| 1.5.1 | TABLE: List of critical components | | | | P |
|---|---|---|---|---|---|
| Object/part No. | Manufacturer/ trademark | Type/model | Technical data | Standard (Edition / year) | Mark(s) of conformity) |
| | | | | | |
| Enclosure | Various | Various | Polymeric material. Enclosure is not a fire or electrical enclosure.. Product operates on 10W maximum. | - | - |
| External Listed AC/DC power supply | Ubiquiti Networks | UBI-POE-24-5 | Input: 100-240VAC, 50-60Hz, 0.3A<br>Output: 24VDC, 0.5A | UL Listed | E325809 |
| Supplementary information: | | | | | |

| 1.5.1 | TABLE: Opto Electronic Devices | N/A |
|---|---|---|
| Manufacturer ..... : | | |
| Type..... : | | |
| Separately tested ..... : | | |
| Bridging insulation ..... : | | |
| External creepage distance..... : | | |
| Internal creepage distance..... : | | |
| Distance through insulation..... : | | |
| Tested under the following conditions..... : | | |
| Input..... : | | |
| Output..... : | | |
| supplementary information | | |
| | | |

| EN 60950-1 | | | |
|---|---|---|---|
| Clause | Requirement + Test | Result - Remark | Verdict |

| 1.6.2 | TABLE: Electrical data (in normal conditions) | | | | | | P |
|---|---|---|---|---|---|---|---|
| U (V) | I (A) | Irated (A) | P (W) | Fuse # | Ifuse (A) | Condition/status | |
| 19.0 | 0.095 | 0.5 | 1.11 | - | - | Maximum Load/Normal | |
| 24.0 | 0.079 | 0.5 | 1.89 | - | - | Maximum Load/Normal | |
| 27.6 | 0.070 | 0.5 | 1.93 | - | - | Maximum Load/Normal | |
| Supplementary information: | | | | | | | |

| 2.1.1.5 c) 1) | TABLE: max. V, A, VA test | | | | N/A |
|---|---|---|---|---|---|
| Voltage (rated) (V) | Current (rated) (A) | Voltage (max.) (V) | Current (max.) (A) | VA (max.) (VA) | |
| | | | | | |
| supplementary information: | | | | | |
| | | | | | |

| 2.1.1.5 c) 2) | TABLE: stored energy | N/A |
|---|---|---|
| Capacitance C (µF) | Voltage U (V) | Energy E (J) |
| | | |
| supplementary information: | | |
| | | |

| 2.2 | TABLE: evaluation of voltage limiting components in SELV circuits | | N/A |
|---|---|---|---|
| Component (measured between) | Max. voltage (V) (normal operation) | | Voltage Limiting Components |
| | V peak | V d.c. | |
| | | | |

| Fault test performed on voltage limiting components | Voltage measured (V) in SELV circuits (V peak or V d.c.) |
|---|---|
| | |
| | |
| supplementary information: | |

| EN 60950-1 | | | |
|---|---|---|---|
| Clause | Requirement + Test | Result - Remark | Verdict |

| 2.5 | TABLE: limited power sources | P |
|---|---|---|

| Circuit output tested: | | | | |
|---|---|---|---|---|
| Measured Uoc (V) with all load circuits disconnected: | | | | |
| | $I_{sc}$ (A) | | VA | |
| | Meas. | Limit | Meas. | Limit |
| | | | | |
| supplementary information: covered by use of External Listed LPS AC/DC power supply | | | | |
| Sc=Short circuit, Oc=Open circuit | | | | |

| 2.10.2 | Table: working voltage measurement | N/A |
|---|---|---|

| Location | RMS voltage (V) | Peak voltage (V) | Comments |
|---|---|---|---|
| | | | |
| supplementary information: | | | |
| | | | |

| 2.10.3 and 2.10.4 | TABLE: Clearance and creepage distance measurements | N/A |
|---|---|---|

| Clearance (cl) and creepage distance (cr) at/of/between: | U peak (V) | U r.m.s. (V) | Required cl (mm) | cl (mm) | Required cr (mm) | cr (mm) |
|---|---|---|---|---|---|---|
| Functional: | | | | | | |
| | | | | | | |
| Supplementary information: Covered by use of external Listed LPS AC/DC power supply | | | | | | |

| 2.10.5 | TABLE: Distance through insulation measurements | N/A |
|---|---|---|

| Distance through insulation (DTI) at/of: | U peak (V) | U rms (V) | Test voltage (V) | Required DTI (mm) | DTI (mm) |
|---|---|---|---|---|---|
| | | | | | |
| Supplementary information: | | | | | |

| EN 60950-1 | | | |
|---|---|---|---|
| Clause | Requirement + Test | Result - Remark | Verdict |

| 4.3.8 | TABLE: Batteries | | | | | | | | | P |
|---|---|---|---|---|---|---|---|---|---|---|
| The tests of 4.3.8 are applicable only when appropriate battery data is not available | | | | | | | Appropriate data available | | | N/A |
| Is it possible to install the battery in a reverse polarity position? | | | | | | | Covered by construction. | | | N/A |
| | Non-rechargeable batteries | | | Rechargeable batteries | | | | | | |
| | Discharging | | Un-intentional charging | Charging | | Discharging | | Reversed charging | | |
| | Meas. current | Manuf. Specs. | | Meas. current | Manuf. Specs. | Meas. current | Manuf. Specs. | Meas. current | Manuf. Specs. | |
| Max. current during normal condition | | | | | | | | | | |
| Max. current during fault condition | | | | | | | | | | |
| | | | | | | | | | | |
| Test results: | | | | | | | | | | Verdict |
| - Chemical leaks | | | | | | | | | | N/A |
| - Explosion of the battery | | | | | | | | | | N/A |
| - Emission of flame or expulsion of molten metal | | | | | | | | | | N/A |
| - Electric strength tests of equipment after completion of tests | | | | | | | | | | N/A |
| Supplementary information: | | | | | | | | | | |

| 4.3.8 | TABLE: Batteries | N/A |
|---|---|---|

Battery category ..... : Lithium Rechargeable Battery
Manufacturer ..... : Seiko International, Inc.
Type / model..... : MS621FEFL11E
Voltage ..... : 3V
Capacity ..... : 5.5mAh
Tested and Certified by (incl. Ref. No.)..... :
Circuit protection diagram:

| EN 60950-1 | | | |
|---|---|---|---|
| Clause | Requirement + Test | Result - Remark | Verdict |

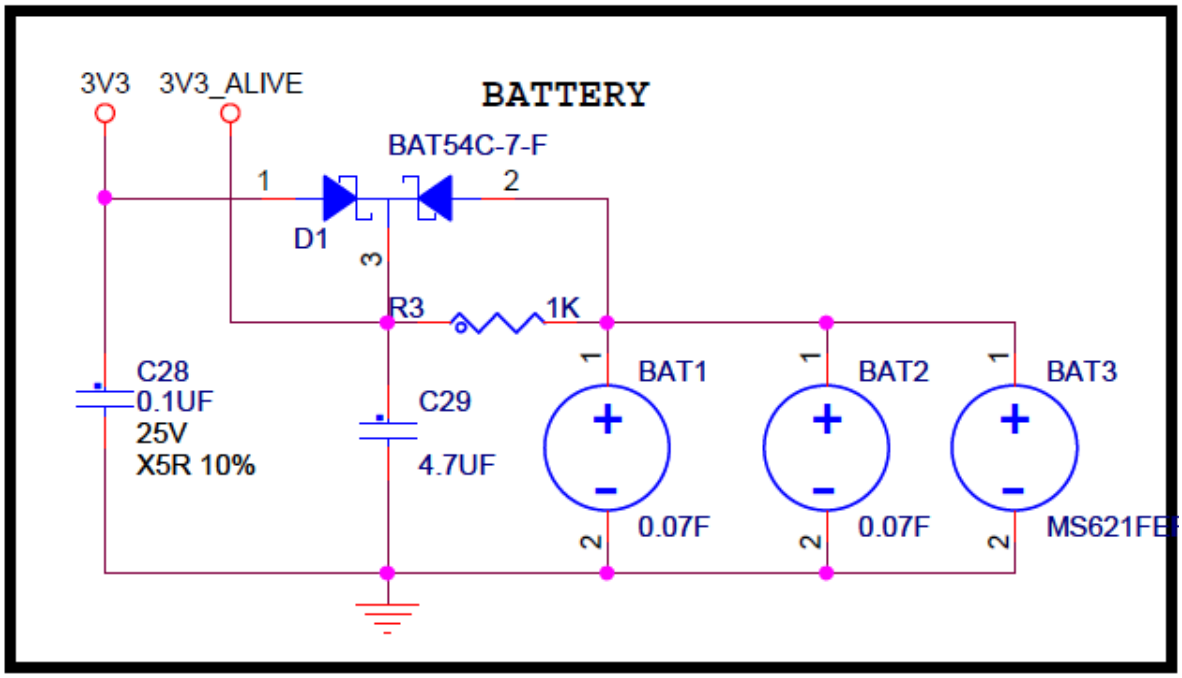


| MARKINGS AND INSTRUCTIONS (1.7.12, 1.7.15) | |
|---|---|
| Location of replaceable battery | |
| Language(s) ……..: | |
| Close to the battery ……..: | |
| In the servicing instructions ……..: | |
| In the operating instructions ……..: | |

| EN 60950-1 | | | |
|---|---|---|---|
| Clause | Requirement + Test | Result - Remark | Verdict |

| 4.5 | TABLE: Thermal requirements | | | | | | P |
|---|---|---|---|---|---|---|---|
| | Supply voltage (V) .....: | 19 | VDC | | | | — |
| | Ambient $T_{min}$ (°C) .....: | 23.03 | | | | | — |
| | Ambient $T_{max}$ (°C) .....: | 40 | | | | | — |
| Maximum measured temperature T of part/at:: | | T (°C) | | | | | Allowed $T_{max}$ (°C) |
| | | | | | | | |

Supplementary information:

| Temperature T of winding: | $t_1$ (°C) | $R_1$ (Ω) | $t_2$ (°C) | $R_2$ (Ω) | T (°C) | Allowed $T_{max}$ (°C) | Insulation class |
|---|---|---|---|---|---|---|---|
| Ambient | 40 | | | | | 40 | |
| Battery | 49.78 | | | | | 95 | |
| Internal Connector | 51.57 | | | | | 95 | |
| POE Connector | 23.28 | | | | | 95 | |
| Enclosure Body | 25.99 | | | | | 70 | |
| Enclosure Dome | 32.78 | | | | | 70 | |

Supplementary information: The above temperature is normalized based on maximum ambient temperature of the equipment declared by manufacturer.

| 4.5.5 | TABLE: Ball pressure test of thermoplastic parts | | | N/A |
|---|---|---|---|---|
| | Allowed impression diameter (mm) .....: | ≤ 2 mm | | — |
| Part | | Test temperature (°C) | Impression diameter (mm) | |
| | | | | |

Supplementary information:

| 4.7 | TABLE: Resistance to fire | | | | N/A |
|---|---|---|---|---|---|
| Part | Manufacturer of material | Type of material | Thickness (mm) | Flammability class | Evidence |

Supplementary information:

| 5.1 | TABLE: touch current measurement | | N/A |
|---|---|---|---|
| Measured between: | Measured (mA) | Limit (mA) | Comments/conditions |
| | | | |

| EN 60950-1 | | | |
|---|---|---|---|
| Clause | Requirement + Test | Result - Remark | Verdict |

supplementary information:

| 5.2 | TABLE: Electric strength tests, impulse tests and voltage surge tests | | |
|---|---|---|---|
| Test voltage applied between: | Voltage shape (AC, DC, impulse, surge) | Test voltage (V) | Breakdown Yes / No |
| Functional: | | | |
| | | | |
| Supplementary information: | | | |

| 5.3 | TABLE: Fault condition tests | | | | | | N/A |
|---|---|---|---|---|---|---|---|
| | Ambient temperature (°C) .....: | | | | | | — |
| | Power source for EUT: Manufacturer, model/type, output rating .....: | | | | | | — |
| Component No. | Fault | Supply voltage (V) | Test time | Fuse # | Fuse current (A) | Observation | |
| 1 | Functional Insulation | 700 | 60sec | - | - | No Breakdown | |
| Supplementary information: | | | | | | | |

| C.2 | TABLE: transformers | | | | | | N/A |
|---|---|---|---|---|---|---|---|
| Loc. | Tested insulation | Working voltage peak / V (2.10.2) | Working voltage rms / V (2.10.2) | Required electric strength (5.2) | Required clearance / mm (2.10.3) | Required creepage distance / mm (2.10.4) | Required distance thr. insul. (2.10.5) |
| | | | | | | | |
| Loc. | Tested insulation | | | Test voltage/ V | Measured clearance / mm | Measured creepage dist./ mm | Measured distance thr. insul. / mm; number of layers |
| | | | | | | | |
| supplementary information: | | | | | | | |
| | | | | | | | |

| EN 60950-1 | | | |
|---|---|---|---|
| Clause | Requirement + Test | Result - Remark | Verdict |

| | | |
|---|---|---|
| **C.2** | **TABLE: transformers** | N/A |
| Transformer | | |

| EN 60950-1 | | | |
|---|---|---|---|
| Clause | Requirement + Test | Result - Remark | Verdict |

**List of test equipment used:**

| | |
|---|---|
| Company Name | Ubiquiti Networks, Inc |
| Project # | 33112 |
| Model # of Unit | AirCam Dome |
| Project Engineer | Shaima Adin |
| Date | November 09, 2011 |

| Asset Number: | Equipment Type: | Manufacturer Name: | Model Number: | Calibration Date: | Calibration Due Date: |
|---|---|---|---|---|---|
| 3U1002 | AC/DC Current Probe | Tektronix | A622 | 02/15/11 | 02/15/12 |
| 3U1020 | Digital Multimeter | Tektronix | TX3 | 02/28/11 | 02/28/12 |
| 3U1023 | Digital Multimeter | Fluke | 87 | 01/29/11 | 01/29/12 |
| 3U1043 | Petroleum Spirit | Fisher Scientific | H292 | NCR | NCR |
| 3U1047 | DC Power Supply | Xantrex | XDC 80-75 | FVBU | FVBU |
| 3U1094 | Ambient pressure / humidity / temperature monitor | Omega | OM-CP-PRHTEMP2000 | 03/08/11 | 03/08/12 |
| 3U1097 | Data Logger | Agilent/HP | 34970A | 03/29/11 | 03/29/12 |
| 3U1100 | 20 Channel Multiplexer | Agilent/HP | 34901A | 05/19/11 | 05/19/12 |
| 3U1101 | Stopwatch | Control Company | 14-649-9 | 04/19/11 | 04/19/13 |
| | | | | | |
| | | | | | |
| | | | | | |
| | | | | | |

*NCR = No Calibration Required.

*FVBU = Functional Verification Before Use. Instrument is used with calibrated instruments.

# **Enclosure 1:** Other Country National And Group Differences

| IEC60950_1B - ATTACHMENT EUROPEAN GROUP DIFFERENCES AND NATIONAL DIFFERENCES | | | |
|---|---|---|---|
| Clause | Requirement + Test | Result - Remark | Verdict |

**ATTACHMENT TO TEST REPORT IEC 60950-1**
**EUROPEAN GROUP DIFFERENCES AND NATIONAL DIFFERENCES**
Information technology equipment – Safety –

PART 1: GENERAL REQUIREMENTS

**Differences according to** .....: EN 60950-1:2006/A11:2009/A1:2010

**Attachment Form No**.....: EU_GD_IEC60950_1B
**Attachment Originator**.....: SGS Fimko Ltd
**Master Attachment**.....: Date (2010-04)

**Copyright © 2010 IEC System for Conformity Testing and Certification of Electrical Equipment (IECEE), Geneva, Switzerland. All rights reserved.**

**EN 60950-1:2006/A11:2009/A1:2010 – CENELEC COMMON MODIFICATIONS**

| **IEC 60950-1, GROUP DIFFERENCES (CENELEC common modifications EN)** | | | |
|---|---|---|---|
| Clause | Requirement + Test | Result - Remark | Verdict |
| Contents | Add the following annexes:<br>Annex ZA (normative) — Normative references to international publications with their corresponding European publications<br>Annex ZB (normative) — Special national conditions | | P |
| General | Delete all the "country" notes in the reference document (IEC 60950-1:2005) according to the following list:<br>1.4.8 Note 2; 1.5.1 Note 2 & 3; 1.5.7.1 Note<br>1.5.8 Note 2; 1.5.9.4 Note; 1.7.2.1 Note 4, 5 & 6<br>2.2.3 Note; 2.2.4 Note; 2.3.2 Note<br>2.3.2.1 Note 2; 2.3.4 Note 2; 2.6.3.3 Note 2 & 3<br>2.7.1 Note; 2.10.3.2 Note 2; 2.10.5.13 Note 3<br>3.2.1.1 Note; 3.2.4 Note 3.; 2.5.1 Note 2<br>4.3.6 Note 1 & 2; 4.7 Note 4; 4.7.2.2 Note<br>4.7.3.1 Note 2; 5.1.7.1 Note 3 & 4; 5.3.7 Note 1<br>6 Note 2 & 5; 6.1.2.1 Note 2; 6.1.2.2 Note<br>6.2.2 Note; 6.2.2.1 Note 2; 6.2.2.2 Note<br>7.1 Note 3; 7.2 Note; 7.3 Note 1 & 2<br>G.2.1 Note 2; Annex H Note 2 | | P |
| General (A1:2010) | Delete all the "country" notes in the reference document (IEC 60950-1:2005/A1:2010) according to the following list:<br>1.5.7.1 Note; 6.1.2.1 Note 2<br>6.2.2.1 Note 2; EE.3 Note | | N/A |

# **Enclosure 1:** Other Country National And Group Differences

| IEC60950_1B - ATTACHMENT EUROPEAN GROUP DIFFERENCES AND NATIONAL DIFFERENCES | | | |
|---|---|---|---|
| Clause | Requirement + Test | Result - Remark | Verdict |
| **IEC 60950-1, GROUP DIFFERENCES (CENELEC common modifications EN)** | | | |
| Clause | Requirement + Test | Result - Remark | Verdict |
| 1.3.Z1 | Add the following subclause:<br>1.3.Z1 Exposure to excessive sound pressure<br>The apparatus shall be so designed and constructed as to present no danger when used for its intended purpose, either in normal operating conditions or under fault conditions, particularly providing protection against exposure to excessive sound pressures from headphones or earphones.<br>NOTE Z1 A new method of measurement is described in EN 50332-1, Sound system equipment: Headphones and earphones associated with portable audio equipment - Maximum sound pressure level measurement methodology and limit considerations - Part 1: General method for "one package equipment", and in EN 50332-2, Sound system equipment: Headphones and earphones associated with portable audio equipment - Maximum sound pressure level measurement methodology and limit considerations - Part 2: Guidelines to associate sets with headphones coming from different manufacturers. | Not intended to make sound | N/A |
| 1.5.1 | Add the following NOTE:<br>NOTE Z1 The use of certain substances in electrical and electronic equipment is restricted within the EU: see Directive 2002/95/EC | | N/A |
| 1.7.2.1<br>(A1:2010) | In addition, for a PORTABLE SOUND SYSTEM, the instructions shall include a warning that excessive sound pressure from earphones and headphones can cause hearing loss. | Not portable sound system | N/A |
| 2.7.1 | Replace the subclause as follows:<br>Basic requirements<br>To protect against excessive current, short-circuits and earth faults in PRIMARY CIRCUITS, protective devices shall be included either as integral parts of the equipment or as parts of the building installation, subject to the following, a), b) and c):<br>a) except as detailed in b) and c), protective devices necessary to comply with the requirements of 5.3 shall be included as parts of the equipment;<br>b) for components in series with the mains input to the equipment such as the supply cord, appliance coupler, r.f.i. filter and switch, short-circuit and earth fault protection may be provided by protective devices in the building installation; | No primary circuit | N/A |

# **Enclosure 1:** Other Country National And Group Differences

| IEC60950_1B - ATTACHMENT EUROPEAN GROUP DIFFERENCES AND NATIONAL DIFFERENCES | | | |
|---|---|---|---|
| Clause | Requirement + Test | Result - Remark | Verdict |
| **IEC 60950-1, GROUP DIFFERENCES (CENELEC common modifications EN)** | | | |
| Clause | Requirement + Test | Result - Remark | Verdict |
| | c) it is permitted for PLUGGABLE EQUIPMENT TYPE B or PERMANENTLY CONNECTED EQUIPMENT, to rely on dedicated overcurrent and short-circuit protection in the building installation, provided that the means of protection, e.g. fuses or circuit breakers, is fully specified in the installation instructions.<br>If reliance is placed on protection in the building installation, the installation instructions shall so state, except that for PLUGGABLE EQUIPMENT TYPE A the building installation shall be regarded as providing protection in accordance with the rating of the wall socket outlet. | Not such equipment. Power is provided through POE. | N/A |
| 2.7.2 | This subclause has been declared 'void'. | | N/A |
| 3.2.3 | Delete the NOTE in Table 3A, and delete also in this table the conduit sizes in parentheses. | | N/A |
| 3.2.5.1 | Replace "60245 IEC 53" by "H05 RR-F";<br>"60227 IEC 52" by "H03 VV-F or H03 VVH2-F";<br>"60227 IEC 53" by "H05 VV-F or H05 VVH2-F2".<br>In Table 3B, replace the first four lines by the following:<br>Up to and including 6 \| 0,75 [a)] \|<br>Over 6 up to and including 10\| (0,75) [b)] 1,0 \| Over 10 up to and including 16\| (1,0) [c)] 1,5 \|<br>In the conditions applicable to Table 3B delete the words "in some countries" in condition [a)].<br>In NOTE 1, applicable to Table 3B, delete the second sentence. | | N/A |
| 3.3.4 | In Table 3D, delete the fourth line: conductor sizes for 10 to 13 A, and replace with the following:<br>Over 10 up to and including 16 \| 1,5 to 2,5 \| 1,5 to 4 \|<br>Delete the fifth line: conductor sizes for 13 to 16 A | | N/A |
| 4.3.13.6<br>(A1:2010) | Replace the existing NOTE by the following:<br>NOTE Z1 Attention is drawn to:<br>1999/519/EC: Council Recommendation on the limitation of exposure of the general public to electromagnetic fields 0 Hz to 300 GHz, and<br>2006/25/EC: Directive on the minimum health and safety requirements regarding the exposure of workers to risks arising from physical agents (artificial optical radiation). | | N/A |

# **Enclosure 1:** Other Country National And Group Differences

| IEC60950_1B - ATTACHMENT EUROPEAN GROUP DIFFERENCES AND NATIONAL DIFFERENCES | | | |
|---|---|---|---|
| Clause | Requirement + Test | Result - Remark | Verdict |
| **IEC 60950-1, GROUP DIFFERENCES (CENELEC common modifications EN)** | | | |
| Clause | Requirement + Test | Result - Remark | Verdict |
| | Standards taking into account mentioned Recommendation and Directive which demonstrate compliance with the applicable EU Directive are indicated in the OJEC. | | N/A |
| Annex H | Replace the last paragraph of this annex by:<br>At any point 10 cm from the surface of the OPERATOR ACCESS AREA, the dose rate shall not exceed 1 µSv/h (0,1 mR/h) (see NOTE). Account is taken of the background level.<br>Replace the notes as follows:<br>NOTE These values appear in Directive 96/29/Euratom.<br>Delete NOTE 2. | | N/A |
| Bibliography | Additional EN standards. | | — |

| | | |
|---|---|---|
| **ZA** | **NORMATIVE REFERENCES TO INTERNATIONAL PUBLICATIONS WITH THEIR CORRESPONDING EUROPEAN PUBLICATIONS** | — |

| **ZB ANNEX (normative)**<br>**SPECIAL NATIONAL CONDITIONS (EN)** | | | |
|---|---|---|---|
| Clause | Requirement + Test | Result - Remark | Verdict |
| 1.2.4.1 | In **Denmark**, certain types of Class I appliances (see 3.2.1.1) may be provided with a plug not establishing earthing conditions when inserted into Danish socket-outlets. | Not Class I equipment | N/A |
| 1.2.13.14 | In **Norway** and **Sweden**, for requirements see 1.7.2.1 and 7.3 of this annex. | | N/A |
| 1.5.7.1 | In **Finland, Norway** and **Sweden**, resistors bridging BASIC INSULATION in CLASS I PLUGGABLE EQUIPMENT TYPE A must comply with the requirements in 1.5.7.1. In addition when a single resistor is used, the resistor must withstand the resistor test in 1.5.7.2. | Not Class I equipment | N/A |
| 1.5.8 | In **Norway**, due to the IT power system used (see annex V, Figure V.7), capacitors are required to be rated for the applicable line-to-line voltage (230 V). | Not for IT power system | N/A |
| 1.5.9.4 | In **Finland**, **Norway** and **Sweden**, the third dashed sentence is applicable only to equipment as defined in 6.1.2.2 of this annex. | No TNV-Circuitry | N/A |

# **Enclosure 1:** Other Country National And Group Differences

| IEC60950_1B - ATTACHMENT EUROPEAN GROUP DIFFERENCES AND NATIONAL DIFFERENCES | | | |
|---|---|---|---|
| Clause | Requirement + Test | Result - Remark | Verdict |
| **ZB ANNEX (normative)**<br>**SPECIAL NATIONAL CONDITIONS (EN)** | | | |
| Clause | Requirement + Test | Result - Remark | Verdict |
| 1.7.2.1 | In **Finland**, **Norway** and **Sweden**, CLASS I PLUGGABLE EQUIPMENT TYPE A intended for connection to other equipment or a network shall, if safety relies on connection to protective earth or if surge suppressors are connected between the network terminals and accessible parts, have a marking stating that the equipment must be connected to an earthed mains socket-outlet.<br>The marking text in the applicable countries shall be as follows:<br>In Finland: "Laite on liitettävä suojakoskettimilla varustettuun pistorasiaan"<br>In Norway: “Apparatet må tilkoples jordet stikkontakt”<br>In Sweden: “Apparaten skall anslutas till jordat uttag”<br>In **Norway** and **Sweden**, the screen of the cable distribution system is normally not earthed at the entrance of the building and there is normally no equipotential bonding system within the building. Therefore the protective earthing of the building installation need to be isolated from the screen of a cable distribution system.<br>It is however accepted to provide the insulation external to the equipment by an adapter or an interconnection cable with galvanic isolator, which may be provided by e.g. a retailer.<br>The user manual shall then have the following or similar information in Norwegian and Swedish language respectively, depending on in what country the equipment is intended to be used in:<br>“Equipment connected to the protective earthing of the building installation through the mains connection or through other equipment with a connection to protective earthing – and to a cable distribution system using coaxial cable, may in some circumstances create a fire hazard. Connection to a cable distribution system has therefore to be provided through a device providing electrical isolation below a certain frequency range (galvanic isolator, see EN 60728-11).” | Not Class I equipment | N/A |

# **Enclosure 1:** Other Country National And Group Differences

| IEC60950_1B - ATTACHMENT EUROPEAN GROUP DIFFERENCES AND NATIONAL DIFFERENCES | | | |
|---|---|---|---|
| Clause | Requirement + Test | Result - Remark | Verdict |
| **ZB ANNEX (normative)**<br>**SPECIAL NATIONAL CONDITIONS (EN)** | | | |
| Clause | Requirement + Test | Result - Remark | Verdict |
| | NOTE In Norway, due to regulation for installations of cable distribution systems, and in Sweden, a galvanic isolator shall provide electrical insulation below 5 MHz. The insulation shall withstand a dielectric strength of 1,5 kV r.m.s., 50 Hz or 60 Hz, for 1 min.<br>Translation to Norwegian (the Swedish text will also be accepted in Norway):<br>"Utstyr som er koplet til beskyttelsesjord via nettplugg og/eller via annet jordtilkoplet utstyr – og er tilkoplet et kabel-TV nett, kan forårsake brannfare. For å unngå dette skal det ved tilkopling av utstyret til kabel-TV nettet installeres en galvanisk isolator mellom utstyret og kabel- TV nettet."<br>Translation to Swedish:<br>"Utrustning som är kopplad till skyddsjord via jordat vägguttag och/eller via annan utrustning och samtidigt är kopplad till kabel-TV nät kan i vissa fall medföra risk för brand. För att undvika detta skall vid anslutning av utrustningen till kabel-TV nät galvanisk isolator finnas mellan utrustningen och kabel-TV nätet." | | N/A |
| 1.7.5 | In **Denmark**, socket-outlets for providing power to other equipment shall be in accordance with the Heavy Current Regulations, Section 107-2-D1, Standard Sheet DK 1-3a, DK 1-5a or DK 1-7a, when used on Class I equipment. For STATIONARY EQUIPMENT the socket-outlet shall be in accordance with Standard Sheet DK 1-1b or DK 1-5a.<br>For **CLASS II EQUIPMENT** the socket outlet shall be in accordance with Standard Sheet DKA 1-4a. | No socket outlets | N/A |
| 2.2.4 | In **Norway**, for requirements see 1.7.2.1, 6.1.2.1 and 6.1.2.2 of this annex. | No TNV or CDS systems | N/A |
| 2.3.2 | In **Finland**, **Norway** and **Sweden** there are additional requirements for the insulation. See 6.1.2.1 and 6.1.2.2 of this annex. | No TNV or CDS systems | N/A |
| 2.3.4 | In **Norway**, for requirements see 1.7.2.1, 6.1.2.1 and 6.1.2.2 of this annex. | No TNV or CDS systems | N/A |
| 2.6.3.3 | In the **United Kingdom**, the current rating of the circuit shall be taken as 13 A, not 16 A. | | N/A |
| 2.7.1 | In the **United Kingdom**, to protect against excessive currents and short-circuits in the PRIMARY CIRCUIT of DIRECT PLUG-IN EQUIPMENT, tests according to 5.3 shall be conducted, using an external protective device rated 30 A or 32 A. If these tests fail, suitable protective devices shall be included as integral parts of the DIRECT PLUG-IN EQUIPMENT, so that the requirements of 5.3 are met. | No primary circuits within equipment | N/A |

# **Enclosure 1:** Other Country National And Group Differences

| IEC60950_1B - ATTACHMENT EUROPEAN GROUP DIFFERENCES AND NATIONAL DIFFERENCES | | | |
|---|---|---|---|
| Clause | Requirement + Test | Result - Remark | Verdict |
| **ZB ANNEX (normative)**<br>**SPECIAL NATIONAL CONDITIONS (EN)** | | | |
| Clause | Requirement + Test | Result - Remark | Verdict |
| 2.10.5.13 | In **Finland**, **Norway** and **Sweden**, there are additional requirements for the insulation, see 6.1.2.1 and 6.1.2.2 of this annex. | No TNV or CDS systems | N/A |
| 3.2.1.1 | In **Switzerland**, supply cords of equipment having a RATED CURRENT not exceeding 10 A shall be provided with a plug complying with SEV 1011 or IEC 60884-1 and one of the following dimension sheets:<br>SEV 6532-2.1991 Plug Type 15 3P+N+PE 250/400 V, 10 A<br>SEV 6533-2.1991 Plug Type 11 L+N 250 V, 10 A<br>SEV 6534-2.1991 Plug Type 12 L+N+PE 250 V, 10 A<br>In general, EN 60309 applies for plugs for currents exceeding 10 A. However, a 16 A plug and socket-outlet system is being introduced in Switzerland, the plugs of which are according to the following dimension sheets, published in February 1998:<br>SEV 5932-2.1998: Plug Type 25 , 3L+N+PE 230/400 V, 16 A<br>SEV 5933-2.1998:Plug Type 21, L+N, 250 V, 16A<br>SEV 5934-2.1998: Plug Type 23, L+N+PE .250 V, 16 A | | N/A<br>N/A |
| 3.2.1.1 | In **Denmark**, supply cords of single-phase equipment having a rated current not exceeding13 A shall be provided with a plug according to the Heavy Current Regulations, Section 107-2-D1.<br>CLASS I EQUIPMENT provided with socket-outlets with earth contacts or which are intended to be used in locations where protection against indirect contact is required according to the wiring rules shall be provided with a plug in accordance with standard sheet DK 2-1a or DK 2-5a.<br>If poly-phase equipment and single-phase equipment having a RATED CURRENT exceeding 13 A is provided with a supply cord with a plug, this plug shall be in accordance with the Heavy Current Regulations, Section 107-2-D1 or EN 60309-2. | Supply cord part of the listed external AC/DC power supply | N/A |

# **Enclosure 1:** Other Country National And Group Differences

| IEC60950_1B - ATTACHMENT EUROPEAN GROUP DIFFERENCES AND NATIONAL DIFFERENCES | | | |
|---|---|---|---|
| Clause | Requirement + Test | Result - Remark | Verdict |
| **ZB ANNEX (normative)**<br>**SPECIAL NATIONAL CONDITIONS (EN)** | | | |
| Clause | Requirement + Test | Result - Remark | Verdict |
| 3.2.1.1 | In **Spain**, supply cords of single-phase equipment having a rated current not exceeding 10 A shall be provided with a plug according to UNE 20315:1994.<br>Supply cords of single-phase equipment having a rated current not exceeding 2,5 A shall be provided with a plug according to UNE-EN 50075:1993.<br>CLASS I EQUIPMENT provided with socket-outlets with earth contacts or which are intended to be used in locations where protection against indirect contact is required according to the wiring rules, shall be provided with a plug in accordance with standard UNE 20315:1994.<br>If poly-phase equipment is provided with a supply cord with a plug, this plug shall be in accordance with UNE-EN 60309-2. | Supply cord part of the listed external AC/DC power supply | N/A |
| 3.2.1.1 | In the **United Kingdom**, apparatus which is fitted with a flexible cable or cord and is designed to be connected to a mains socket conforming to BS 1363 by means of that flexible cable or cord and plug, shall be fitted with a 'standard plug' in accordance with Statutory Instrument 1768:1994 - The Plugs and Sockets etc. (Safety) Regulations 1994, unless exempted by those regulations.<br>NOTE 'Standard plug' is defined in SI 1768:1994 and essentially means an approved plug conforming to BS 1363 or an approved conversion plug. | Supply cord part of the listed external AC/DC power supply | N/A |
| 3.2.1.1 | In **Ireland**, apparatus which is fitted with a flexible cable or cord and is designed to be connected to a mains socket conforming to I.S. 411 by means of that flexible cable or cord and plug, shall be fitted with a 13 A plug in accordance with Statutory Instrument 525:1997 - National Standards Authority of Ireland (section 28) (13 A Plugs and Conversion Adaptors for Domestic Use) Regulations 1997. | Supply cord part of the listed external AC/DC power supply | N/A |
| 3.2.4 | In **Switzerland**, for requirements see 3.2.1.1 of this annex. | | N/A |
| 3.2.5.1 | In the **United Kingdom**, a power supply cord with conductor of 1,25 mm2 is allowed for equipment with a rated current over 10 A and up to and including 13 A. | Supply cord part of the listed external AC/DC power supply | N/A |

# **Enclosure 1:** Other Country National And Group Differences

| IEC60950_1B - ATTACHMENT EUROPEAN GROUP DIFFERENCES AND NATIONAL DIFFERENCES | | | |
|---|---|---|---|
| Clause | Requirement + Test | Result - Remark | Verdict |
| **ZB ANNEX (normative)**<br>**SPECIAL NATIONAL CONDITIONS (EN)** | | | |
| Clause | Requirement + Test | Result - Remark | Verdict |
| 3.3.4 | In the **United Kingdom**, the range of conductor sizes of flexible cords to be accepted by terminals for equipment with a RATED CURRENT of over 10 A up to and including 13 A is:<br>• 1,25 $mm^2$ to 1,5 $mm^2$ nominal cross-sectional area. | | N/A |
| 4.3.6 | In the **United Kingdom**, the torque test is performed using a socket outlet complying with BS 1363 part 1:1995, including Amendment 1:1997 and Amendment 2:2003 and the plug part of DIRECT PLUG-IN EQUIPMENT shall be assessed to BS 1363: Part 1, 12.1, 12.2, 12.3, 12.9, 12.11, 12.12, 12.13, 12.16 and 12.17, except that the test of 12.17 is performed at not less than 125 °C. Where the metal earth pin is replaced by an Insulated Shutter Opening Device (ISOD), the requirements of clauses 22.2 and 23 also apply. | Supply cord part of the listed external AC/DC power supply | N/A |
| 4.3.6 | In **Ireland**, DIRECT PLUG-IN EQUIPMENT is known as plug similar devices. Such devices shall comply with Statutory Instrument 526:1997 - National Standards Authority of Ireland (Section 28) (Electrical plugs, plug similar devices and sockets for domestic use) Regulations, 1997. | No such equipment | N/A |
| 5.1.7.1 | In **Finland**, **Norway** and **Sweden** TOUCH CURRENT measurement results exceeding 3,5 mA r.m.s. are permitted only for the following equipment:<br>• STATIONARY PLUGGABLE EQUIPMENT TYPE A that<br>is intended to be used in a RESTRICTED ACCESS LOCATION where equipotential bonding has been applied, for example, in a telecommunication centre; and<br>has provision for a permanently connected PROTECTIVE EARTHING CONDUCTOR; and<br>is provided with instructions for the installation of that conductor by a SERVICE PERSON;<br>• STATIONARY PLUGGABLE EQUIPMENT TYPE B;<br>• STATIONARY PERMANENTLY CONNECTED EQUIPMENT. | DC equipment | N/A |

# **Enclosure 1:** Other Country National And Group Differences

| IEC60950_1B - ATTACHMENT EUROPEAN GROUP DIFFERENCES AND NATIONAL DIFFERENCES | | | |
|---|---|---|---|
| Clause | Requirement + Test | Result - Remark | Verdict |
| **ZB ANNEX (normative)**<br>**SPECIAL NATIONAL CONDITIONS (EN)** | | | |
| Clause | Requirement + Test | Result - Remark | Verdict |
| 6.1.2.1<br>(A1:2010) | In **Finland**, **Norway** and **Sweden**, add the following text between the first and second paragraph of the compliance clause:<br>If this insulation is solid, including insulation forming part of a component, it shall at least consist of either<br>- two layers of thin sheet material, each of which shall pass the electric strength test below, or<br>- one layer having a distance through insulation of at least 0,4 mm, which shall pass the electric strength test below.<br>Alternatively for components, there is no distance through insulation requirements for the insulation consisting of an insulating compound completely filling the casing, so that CLEARANCES and CREEPAGE DISTANCES do not exist, if the component passes the electric strength test in accordance with the compliance clause below and in addition<br>- passes the tests and inspection criteria of 2.10.11 with an electric strength test of 1,5 kV multiplied by 1,6 (the electric strength test of<br>2.10.10 shall be performed using 1,5 kV), and<br>- is subject to ROUTINE TESTING for electric strength during manufacturing, using a test voltage of 1,5 kV. | No TNV circuitry | N/A |

# **Enclosure 1:** Other Country National And Group Differences

| IEC60950_1B - ATTACHMENT EUROPEAN GROUP DIFFERENCES AND NATIONAL DIFFERENCES | | | |
|---|---|---|---|
| Clause | Requirement + Test | Result - Remark | Verdict |
| **ZB ANNEX (normative)**<br>**SPECIAL NATIONAL CONDITIONS (EN)** | | | |
| Clause | Requirement + Test | Result - Remark | Verdict |
| | It is permitted to bridge this insulation with an optocoupler complying with 2.10.5.4 b).<br><br>It is permitted to bridge this insulation with a capacitor complying with EN 60384-14:2005, subclass Y2.<br>A capacitor classified Y3 according to EN 60384-14:2005, may bridge this insulation under the following conditions:<br>- the insulation requirements are satisfied by having a capacitor classified Y3 as defined by EN 60384-14, which in addition to the Y3 testing, is tested with an impulse test of 2,5 kV defined in EN 60950-1:2006, 6.2.2.1;<br>- the additional testing shall be performed on all the test specimens as described in EN 60384-14;<br>- the impulse test of 2,5 kV is to be performed before the endurance test in EN 60384-14, in the sequence of tests as described in EN 60384-14. | | N/A |
| 6.1.2.2 | In **Finland**, **Norway** and **Sweden**, the exclusions are applicable for PERMANENTLY CONNECTED EQUIPMENT, PLUGGABLE EQUIPMENT TYPE B and equipment intended to be used in a RESTRICTED ACCESS LOCATION where equipotential bonding has been applied, e.g. in a telecommunication centre, and which has provision for a permanently connected PROTECTIVE EARTHING CONDUCTOR and is provided with instructions for the installation of that conductor by a SERVICE PERSON. | No TNV circuitry | N/A |
| 7.2 | In **Finland**, **Norway** and **Sweden**, for requirements see 6.1.2.1 and 6.1.2.2 of this annex.<br>The term TELECOMMUNICATION NETWORK in 6.1.2 being replaced by the term CABLE DISTRIBUTION SYSTEM. | No TNV circuitry no CDS circuitry | N/A |
| 7.3 | In **Norway** and **Sweden**, for requirements see 1.2.13.14 and 1.7.2.1 of this annex. | No CDS circuitry | N/A |
| 7.3 | In **Norway**, for installation conditions see EN 60728-11:2005. | No such circuitry | N/A |

# **Enclosure 1:** Other Country National And Group Differences

| |
|---|
| **ATTACHMENT TO TEST REPORT IEC 60950-1**<br>**FINLAND NATIONAL DIFFERENCES**<br>Information technology equipment – Safety –<br>PART 1: GENERAL REQUIREMENTS |
| **Differences according to** .....: EN 60950-1:2006/A11:2009/A1:2010 |
| **Attachment Form No**.....: FI_ND_IEC60950_1B<br>**Attachment Originator**.....: SGS Fimko Ltd<br>**Master Attachment**.....: Date (2010-04) |
| **Copyright © 2010 IEC System for Conformity Testing and Certification of Electrical Equipment (IECEE), Geneva, Switzerland. All rights reserved.** |

| | **National Differences** | | P |
|---|---|---|---|
| **General** | See also Group Differences (EN 60950-1:2006/A11/A1) | | P |
| 1.5.7.1 | In **Finland** resistors bridging BASIC INSULATION in CLASS I PLUGGABLE EQUIPMENT TYPE A must comply with the requirements in 1.5.7.1. In addition when a single resistor is used, the resistor must withstand the resistor test in 1.5.7.2. | No basic insulation | N/A |
| 1.5.9.4 | In **Finland,** the third dashed sentence is applicable only to equipment as defined in 6.1.2.2 of this annex. | | N/A |
| 1.7.2.1 | In **Finland**, CLASS I PLUGGABLE EQUIPMENT TYPE A intended for connection to other equipment or a network shall, if safety relies on connection to protective earth or if surge suppressors are connected between the network terminals and accessible parts, have a marking stating that the equipment must be connected to an earthed mains socket-outlet.<br>The marking text in Finland shall be as follows:<br>"Laite on liitettävä suojakoskettimilla varustettuun pistorasiaan" | Not class I | N/A |
| 2.3.2 | In **Finland,** there are additional requirements for the insulation. See 6.1.2.1 and 6.1.2.2 of this annex. | No TNV circuitry | N/A |
| 2.10.5.13 | In **Finland,** there are additional requirements for the insulation, see 6.1.2.1 and 6.1.2.2 of this annex. | No TNV circuitry | N/A |

# **Enclosure 1:** Other Country National And Group Differences

| | | | |
|---|---|---|---|
| 5.1.7.1 | In **Finland,** TOUCH CURRENT measurement results exceeding 3,5 mA r.m.s. are permitted only for the following equipment:<br>• STATIONARY PLUGGABLE EQUIPMENT TYPE A that<br>- is intended to be used in a RESTRICTED ACCESS LOCATION where equipotential bonding has been applied, for example, in a telecommunication centre; and<br>- has provision for a permanently connected PROTECTIVE EARTHING CONDUCTOR; and<br>- is provided with instructions for the installation of that conductor by a SERVICE PERSON;<br>• STATIONARY PLUGGABLE EQUIPMENT TYPE B;<br>• STATIONARY PERMANENTLY CONNECTED EQUIPMENT. | DC equipment | N/A |
| 6.1.2.1<br>(A1:2010) | In **Finland,** add the following text between the first and second paragraph of the compliance clause:<br>If this insulation is solid, including insulation forming part of a component, it shall at least consist of either<br>- two layers of thin sheet material, each of which shall pass the electric strength test below, or<br>- one layer having a distance through insulation of at least 0,4 mm, which shall pass the electric strength test below.<br>Alternatively for components, there is no distance through insulation requirement for the insulation consisting of an insulating compound completely filling the casing, so that CLEARANCES and CREEPAGE DISTANCES do not exist, if the component passes the electric strength test in accordance with the compliance clause below and in addition<br>- passes the tests and inspection criteria of 2.10.11 with an electric strength test of 1,5 kV multiplied by 1,6 (the electric strength test of 2.10.10 shall be performed using 1,5 kV), and<br>- is subject to ROUTINE TESTING for electric strength during manufacturing, using a test voltage of 1,5 kV. | No TNV circuitry | N/A |

# **Enclosure 1:** Other Country National And Group Differences

| | | | |
|---|---|---|---|
| | It is permitted to bridge this insulation with an optocoupler complying with 2.10.5.4 b).<br><br>It is permitted to bridge this insulation with a capacitor complying with EN 60384-14:2005, subclass Y2.<br>A capacitor classified Y3 according to EN 60384-14:2005, may bridge this insulation under the following conditions:<br>- the insulation requirements are satisfied by having a capacitor classified Y3 as defined by EN 60384-14:2005 which in addition to the Y3 testing, is tested with an impulse test of 2,5 kV defined in EN 60950-1:2006, 6.2.2.1;<br>- the additional testing shall be performed on all the test specimens as described in EN 60384-14:2005;<br>- the impulse test of 2,5 kV is to be performed before the endurance test in EN 60384-14:2005, in the sequence of tests as described in EN 60384-14:2005. | | N/A |
| 6.1.2.2 | In **Finland,** the exclusions are applicable for PERMANENTLY CONNECTED EQUIPMENT, PLUGGABLE EQUIPMENT TYPE B and equipment intended to be used in a RESTRICTED ACCESS LOCATION where equipotential bonding has been applied, e.g. in a telecommunication centre, and which has provision for a permanently connected PROTECTIVE EARTHING CONDUCTOR and is provided with instructions for the installation of that conductor by a SERVICE PERSON. | | N/A |
| 7.2 | In **Finland,** for requirements see 6.1.2.1 and 6.1.2.2 of this annex.<br>The term TELECOMMUNICATION NETWORK in 6.1.2 being replaced by the term CABLE DISTRIBUTION SYSTEM. | No TNV or CDS | N/A |

# **Enclosure 1:** Other Country National And Group Differences

| GERMANY NATIONAL DIFFERENCES | | | |
|---|---|---|---|
| Clause | Requirement + Test | Result - Remark | Verdict |
| | In IEC 60950-1:2005/A1 **delete** all the "country" notes according to the following list:<br>- 1.5.7.1: Note<br>- 6.1.2.1: Note 2<br>- 6.2.2.1: Note 2<br>- EE.3: Note | | N/A |
| | For special national conditions, see Annex ZB. | | N/A |
| **1.1.1** | **Replace** the text of NOTE 3 by the following<br>NOTE 3 The requirements of EN 60065 may also be used to meet safety requirements for multimedia equipment. See IEC Guide 112, *Guide on the safety of multimedia equipment.*<br>For television sets EN 60065 applies. | | N/A |
| **1.2.3** | **Add** the following definition:<br>**1.2.3.Z1**<br>**PORTABLE SOUND SYSTEM**<br>small battery powered audio equipment:<br>–whose prime purpose is to listen to recorded or broadcasted sound; and<br>–that uses headphones or earphones that can be worn in or on or around the ears; and<br>–that allows the user to walk around<br>NOTE Examples are mini-disk or CD players; MP3 audio players or similar equipment. | Not portable sound system | N/A |
| **1.7.2.1** | **Delete** NOTE Z1.<br>**Add** the following paragraph at the end of the subclause:<br>In addition, for a **PORTABLE SOUND SYSTEM**, the instructions shall include a warning that excessive sound pressure from earphones and headphones can cause hearing loss. | Not portable sound system | N/A |
| **4.3.13.6** | **Replace** the existing NOTE by the following:<br>NOTE Z1 Attention is drawn to :<br>1999/519/EC: Council Recommendation on the limitation of exposure of the general public to electromagnetic fields<br>0 Hz to 300 GHz, and<br>2006/25/EC: Directive on the minimum health and safety requirements regarding the exposure of workers to risks arising from physical agents (artificial optical radiation).<br>Standards taking into account mentioned Recommendation and Directive which demonstrate compliance with the applicable EU Directive are indicated in the OJEC. | | N/A |
| **Biblio-graphy** | **Add** the following note for the standard indicated:<br>IEC 60908 NOTE Harmonized as EN 60908. | | N/A |

# **Enclosure 1:** Other Country National And Group Differences

| GERMANY NATIONAL DIFFERENCES | | | | |
|---|---|---|---|---|
| **Replace** the entire Annex ZA by the following:<br>**Annex ZA**<br>(normative)<br>**Normative references to international publications with their corresponding European publications**<br>The following referenced documents are indispensable for the application of this document. For dated references, only the edition cited applies. For undated references, the latest edition of the referenced document (including any amendments) applies.<br>NOTE When an international publication has been modified by common modifications, indicated by (mod), the relevant EN/HD applies. | | | | **P** |
| Publication | Year | Title | EN/HD | Year |
| | | Insulating, sheathing and covering materials for low-voltage energy cables | EN 50363 | Series |
| | | Electrical test methods for low voltage energy cables | EN 50395 | 2005 |
| | | Non electrical test methods for low voltage energy cables | EN 50396 | 2005 |
| IEC 60065 (mod) | 2001 | Audio, video and similar electronic apparatus – Safety requirements | EN 60065 | 2002 |
| A1 | 2005 | | A1 | 2006 |
| A2 | - | | + A11<br>A2 + A12 | 2008<br>- |
| IEC 60068-2-78 | - | Environmental testing Part 2-78: Tests – Test Cab: Damp heat, steady state | EN 60068-2-78 | - |
| IEC 60073 | - | Basic and safety principles for manmachine interface, marking and identification – Coding principles for indication devices and actuators | EN 60073 | - |
| IEC 60083 | - | Plugs and socket-outlets for domestic and similar general use standardized in member countries of IEC | - | - |
| IEC 60085 | 2004 | Electrical insulation – Thermal classification | EN 60085 | 2004 |
| IEC 60112 | - | Method for determining the proof and comparative tracking indices of insulating materials | EN 60112 | - |
| IEC 60227 (mod) | Series | Polyvinyl chloride insulated cables of rated voltages up to and including 450/750V | HD 21 1) | Series |
| IEC 60245 (mod) | | Series Rubber insulated cables of rated voltages up to and including 450/750V | HD 22 2) | Series |
| 1) The HD 21 series is related to, but not directly equivalent with the IEC 60227 series. Also EN 50363, EN 50395 and EN 50386 are to be taken into account.<br>2) The HD 22 series is related to, but not directly equivalent with the IEC 60245 series. Also EN 50363, EN 50395 and EN 50386 are to be taken into account. | | | | |
| IEC 60309 | Series | Plugs, socket-outlets and couplers for industrial purposes | EN 60309 | Series |
| IEC 60317 | Series | Specifications for particular types of winding wires | EN 60317 | Series |
| IEC 60317-43 | - | Part 43: Aromatic polyimide tape wrapped round copper wire, class 240 | EN 60317-43 | - |
| IEC 60320 (mod) | Series | Appliance couplers for household and similar general purposes | EN 60320 | Series |
| IEC 60364-1 (mod) | 2001 | Electrical installations of buildings Part 1: Fundamental principles, assessment of general characteristics, definitions | HD 384.1 S2 | 2001 |
| IEC 60384-14 A1 | 1993<br>1995 | Fixed capacitors for use in electronic equipment | EN 60384-14 | 2005 |

# **Enclosure 1:** Other Country National And Group Differences

| GERMANY NATIONAL DIFFERENCES | | | | |
|---|---|---|---|---|
| | | Part 14: Sectional specification: Fixed capacitors for electromagnetic interference suppression and connection to the supply mains | | |
| IEC 60417 | Data-base | Graphical symbols for use on equipment | - | - |
| IEC 60664-1<br>+ A1<br>+ A2 | 1992<br>2000<br>2002 | Insulation coordination for equipment within low-voltage systems<br>Part 1: Principles, requirements and tests | EN 60664-1 | 2003 |
| IEC 60695-2-11 | - | Fire hazard testing<br>Part 2-11: Glowing/hot-wire based test methods – Glow-wire flammability test method for end-products | EN 60695-2-11 | - |
| IEC 60695-2-20 | - | Part 2-20: Glowing/hot-wire based test methods – Hot-wire coil ignitability – Apparatus, test method and guidance | - | - |
| IEC 60695-10-2 | - | Part 10-2: Guidance and test methods for the minimization of the effects of abnormal heat on electrotechnical products involved in fires – Method for testing products made from non-metallic materials for resistance to heat using the ball pressure test | EN 60695-10-2 | - |
| IEC 60695-10-3 | | Fire hazard testing<br>Part 10-3: Abnormal heat – Mould stress relief distortion test | EN 60695-10-03 | - |
| | | IEC 60695-11-3 - Part 11-3: Test flames – 500 W flames – Apparatus and conformational test methods | - | - |
| IEC 60695-11-4 | - | Part 11-4: Test flames – 50 W flames – Apparatus and conformational test methods | - | - |
| IEC 60695-11-10<br>A1 | - | Part 11-10: Test flames – 50 W horizontal and vertical flame test methods | EN 60695-11-10 | A1 |
| IEC 60695-11-20<br>A1 | - | Part 11-20: Test flames – 500 W flame test methods | EN 60695-11-20<br>A1 | -<br>- |
| IEC 60730-1<br>(mod)<br>A1 | 1999<br>2003 | Automatic electrical controls for household and similar use - Part 1: General requirements | EN 60730-1<br>A1<br>+ A12<br>+ A13<br>+ A14<br>+ A15<br>+ A16 | 2000<br>2004<br>2003<br>2004<br>2005<br>2007<br>2007 |
| A2 | 2007 | | A2 | 2008 |
| IEC 60747-5-5 | 2007 | Semiconductor devices – Discrete devices<br>Part 5-5: Optoelectronic devices – Photocouplers | EN 60747-5-5 | - |
| IEC 60825-1 | - | Safety of laser products Part 1: Equipment classification, requirements and user's guide | EN 60825-1 | |
| IEC 60825-2 | - | Part 2: Safety of optical fiber communication systems | EN 60825-2<br>A1 | -<br>- |
| IEC/TR 60825-9 | - | Part 9: Compilation of maximum permissible exposure to incoherent optical radiation | - | - |
| IEC 60825-12 | - | Part 12: Safety of free space optical communication systems used for transmission of information | EN 60825-12 | - |
| IEC 60851-3 | 1996 | Winding wires – Test methods | EN 60851-3 | 1996 |

# **Enclosure 1:** Other Country National And Group Differences

| GERMANY NATIONAL DIFFERENCES | | | | |
|---|---|---|---|---|
| A1<br>IEC 60851-5<br>A1<br>A2 | 1997<br>1996<br>1997<br>2004 | Part 3: Mechanical properties<br>Part 5: Electrical properties | A1<br>EN 60851-5<br>A1<br>A2 | 1997<br>1996<br>1997<br>2004 |
| IEC 60851-6 | 1996 | Part 6: Thermal properties | EN 60851-6 | 1996 |
| IEC 60885-1 | 1987 | Electrical test methods for electric cables<br>Part 1: Electrical tests for cables, cords and wires for voltages up to and including 450/750 V | - | - |
| IEC 60906-1 | - | IEC System of plugs and socket-outlet for household and similar purposes<br>Part 1: Plugs and socket-outlets 16 A 250 V a.c. | - | - |
| IEC 60906-2 | - | Part 2: Plugs and socket-outlets 15 A 125 V a.c. | - | - |
| IEC 60947-1 | 2004 | Low voltage switchgear and control gear Part 1: General rules | EN 60947-1 | 2004 |
| IEC 60990 | 1999 | Methods of measurement of touch current and protective conductor current | EN 60990 | 1999 |
| IEC 61051-2 | 1991 | Varistors for use in electronic equipment<br>Part 2: Sectional specification for surge suppression varistors | - | - |
| IEC 61058-1 (mod) | 2000 | Switches for appliances<br>Part 1: General requirements | EN 61058-1 3) | 2002 |
| IEC 62471 (mod) | - | Photobiological safety of lamps and lamp systems | EN 62471 | - |
| ISO 178 | - | Plastics - Determination of flexural properties | EN ISO 178 | 2003 |
| ISO 179 | Series | Plastics - Determination of Charpy impact strength | EN ISO 179 | Series |
| ISO 180 | - | Plastics - Determination of Izod impact strength | EN ISO 180 | - |
| ISO 261 | - | ISO general-purpose metric screw threads - General plan | - | - |
| ISO 262 | - | ISO general-purpose metric screw threads - Selected sizes for screws, bolts and nuts | - | - |
| ISO 527 | Series | Plastics - Determination of tensile properties | EN ISO 527 | Series |
| ISO 3864 | Series | Safety colors and safety signs | - | - |
| ISO 4892-1 | - | Plastics - Methods of exposure to laboratory light sources<br>Part 1: General guidance | EN ISO 4892-1 | - |
| ISO 4892-2 | - | Part 2: Xenon-arc sources | EN ISO 4892-2 | - |
| ISO 4892-4 | - | Part 4: Open-flame carbon-arc lamps | - | - |
| ISO 7000 | Data-base | Graphical symbols for use on equipment - Index and synopsis | - | - |
| ISO 8256 | - | Plastics - Determination of tensile-impact strength | EN ISO 8256 | - |
| ISO 9772 | - | Cellular plastics - Determination of horizontal burning characteristics of small specimens subjected to a small flame | - | - |
| ISO 9773 | - | Plastics - Determination of burning behavior of thin flexible vertical specimens in contact with a small-flame ignition source | EN ISO 9773 | - |
| ITU-T Recommendation K.44 | - | Resistibility tests for telecommunication equipment exposed to overvoltages and overcurrents - Basic Recommendation | - | - |

# **Enclosure 1:** Other Country National And Group Differences

| GERMANY NATIONAL DIFFERENCES |
|---|
| 3) EN 61058-1:2002 includes A1:2001 to IEC 61058-1:2000. |

| GERMANY NATIONAL DIFFERENCES | | | |
|---|---|---|---|
| Clause | Requirement + Test | Result - Remark | Verdict |
| **Annex ZB**<br>(normative)<br>**Special National Conditions**<br>**Special national condition**: National characteristic or practice that cannot be changed even over a long period, e.g. climatic conditions, electrical earthing conditions. If it affects harmonization, it forms part of the European Standard or Harmonization Document.<br>For the countries in which the relevant special national apply these provisions are normative, for other countries they are informative.<br>**Add** the following special national condition: | | | |
| 1.5.7.1 | In **Finland, Norway** and **Sweden**<br>No changes needed - Correction of SNC already Part of A11. | | N/A |
| 6.1.2.1 | In **Finland, Norway** and **Sweden**, add the following text between the first and second paragraph of the compliance clause:<br><br>If this insulation is solid, including insulation forming part of a component, it shall at least consist of either<br>- two layers of thin sheet material, each of which shall pass the electric strength test below, or<br>- one layer having a distance through insulation of at least 0,4 mm, which shall pass the electric strength test below.<br><br>Alternatively for components, there is no distance through insulation requirement for the insulation consisting of an insulating compound completely filling the casing, so that CLEARANCES and CREEPAGE DISTANCES do not exist, if the component passes the electric<br>strength test in accordance with the compliance clause below and in addition<br>- passes the tests and inspection criteria of 2.10.11 with an electric strength test of 1,5 kV multiplied by 1,6 (the electric strength test of 2.10.10 shall be performed using 1,5 kV), and<br>- is subject to ROUTINE TESTING for electric strength during manufacturing, using a test voltage of 1,5 kV.<br><br>It is permitted to bridge this insulation with an optocoupler complying with 2.10.5.4 b).<br><br>It is permitted to bridge this insulation with a capacitor complying with<br>EN 60384-14:2005, subclass Y2. | No solid insulation | N/A |

# **Enclosure 1:** Other Country National And Group Differences

| GERMANY NATIONAL DIFFERENCES | | | |
|---|---|---|---|
| Clause | Requirement + Test | Result - Remark | Verdict |
| | A capacitor classified Y3 according to EN 60384-14:2005, may bridge this insulation under the following conditions:<br>- the insulation requirements are satisfied by having a capacitor classified Y3 as defined by EN 60384-14, which in addition to the Y3 testing, is tested with an impulse test of 2,5 kV defined in EN 60950-1:2006, 6.2.2.1;<br>- the additional testing shall be performed on all the test specimens as described in EN 60384-14;<br>- the impulse test of 2,5 kV is to be performed before the endurance test in EN 60384-14, in the sequence of tests as described in EN 60384-14. | | |

| KOREA NATIONAL DIFFERENCES | | | |
|---|---|---|---|
| Clause | Requirement + Test | Result - Remark | Verdict |
| 1.5.101 | Plugs for the connection of the apparatus to the supply mains shall comply with the Korean requirement (KSC 8305). | | N/A |
| 8 : EMC | The apparatus shall comply with the relevant CISPR standards | | N/A |

| UNITED KINGDOM NATIONAL DIFFERENCES | | | |
|---|---|---|---|
| Clause | Requirement + Test | Result - Remark | Verdict |
| 2.6.3.3 | In the **United Kingdom**, the current rating of the circuit shall be taken as 13 A, not 16 A. | | N/A |
| 2.7.1 | In the **United Kingdom**, to protect against excessive currents and short-circuits in the PRIMARY CIRCUIT of DIRECT PLUG-IN EQUIPMENT, tests according to 5.3 shall be conducted, using an external protective device rated 30 A or 32 A. If these tests fail, suitable protective devices shall be included as integral parts of the DIRECT PLUG-IN EQUIPMENT, so that the requirements of 5.3 are met. | | N/A |
| 3.2.1.1 | In the **United Kingdom**, apparatus which is fitted with a flexible cable or cord and is designed to be connected to a mains socket conforming to BS 1363 by means of that flexible cable or cord and plug, shall be fitted with a 'standard plug' in accordance with Statutory Instrument 1768:1994 - The Plugs and Sockets etc. (Safety) Regulations 1994, unless exempted by those regulations.<br>NOTE 'Standard plug' is defined in SI 1768:1994 and essentially means an approved plug conforming to BS 1363 or an approved | | N/A |

# **Enclosure 1:** Other Country National And Group Differences

| UNITED KINGDOM NATIONAL DIFFERENCES | | | |
|---|---|---|---|
| Clause | Requirement + Test | Result - Remark | Verdict |
| | conversion plug. | | |
| 3.2.5.1 | In the **United Kingdom**, a power supply cord with conductor of 1,25 $mm^2$ is allowed for equipment with a rated current over 10 A and up to and including 13 A. | | N/A |
| 3.3.4 | In the **United Kingdom**, the range of conductor sizes of flexible cords to be accepted by terminals for equipment with a RATED CURRENT of over 10 A up to and including 13 A is:<br>• 1,25 $mm^2$ to 1,5 $mm^2$ nominal cross-sectional area. | | N/A |
| 4.3.6 | In the **United Kingdom**, the torque test is performed using a socket outlet complying with BS 1363 part 1:1995, including Amendment 1: 1997 and Amendment 2:2003 and the plug part of DIRECT PLUG-IN EQUIPMENT shall be assessed to BS 1363: Part 1, 12.1, 12.2, 12.3, 12.9, 12.11, 12.12, 12.13, 12.16 and 12.17, except that the test of 12.17 is performed at not less than 125 °C. Where the metal earth pin is replaced by an Insulated Shutter Opening Device (ISOD), the requirements of clauses 22.2 and 23 also apply. | | N/A |

# **Enclosure 2:** Photographs (Figures) and Illustration

## FIGURES

**Figure 1: Overall View of the AirCam Dome.**

# FIGURES (Continued)

**Figure 2: Overall View of the AirCam Dome.**

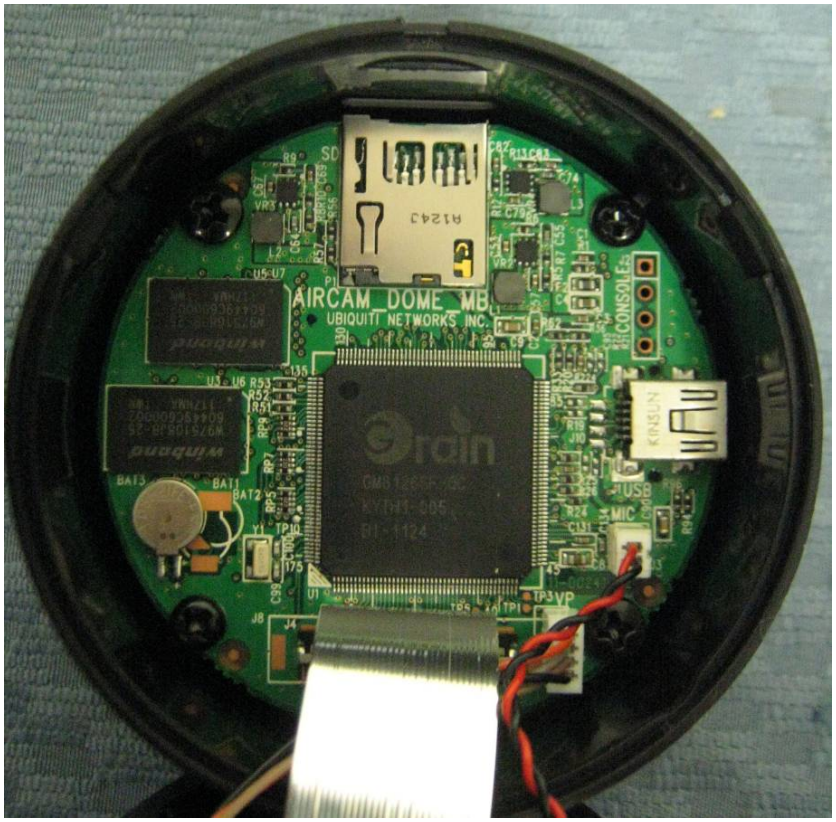

# **Enclosure 2:** Photographs (Figures) and Illustration

## ILLUSTRATIONS
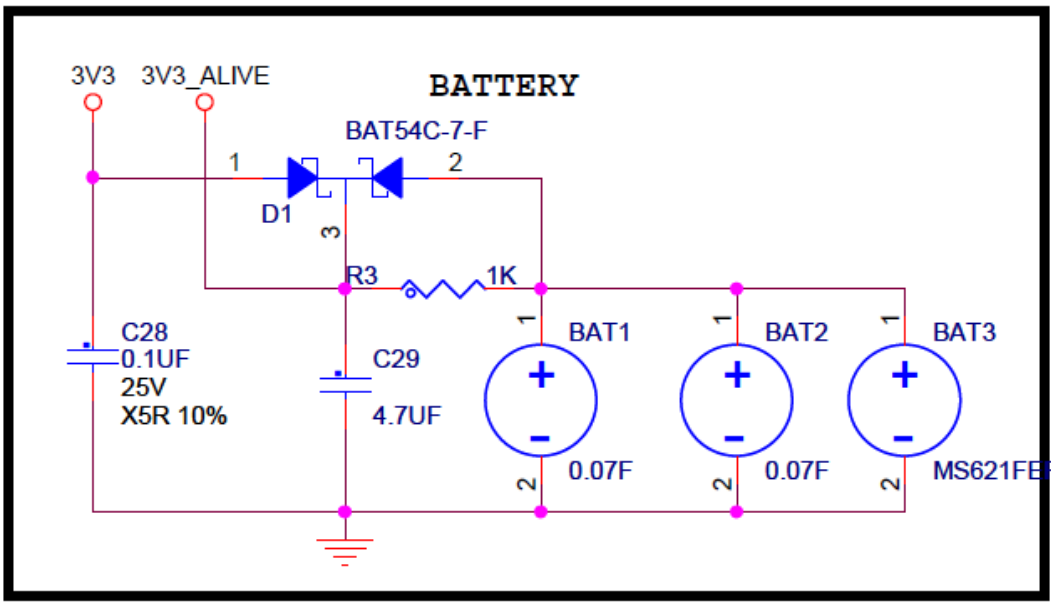
**Illustration 1: Battery Protection Circuit.**